CITY OF SANTA ROSA

IMPROVEMENT PLANS FOR

FARMERS LANE WELL FACILITIES
REHABILITATION

CONTRACT No. C01839

PROJECT DATA

PROJECT SCOPE: DEMOLISH TWO PUMP BUILDINGS. CONSTRUCT NEW MASONRY PUMP BUILDINGS. PROVIDE NEW ELECTRICAL EQUIPMENT AND VARIABLE FREQUENCY DRIVES. PROVIDE PIPE, VALVES, INSTRUMENTATION AND APPURTENANCES. PUMP REPLACEMENT BY OTHERS.

PROJECT ELEVATION: 200 FT±

CONTRACTOR LICENSE: CLASS A

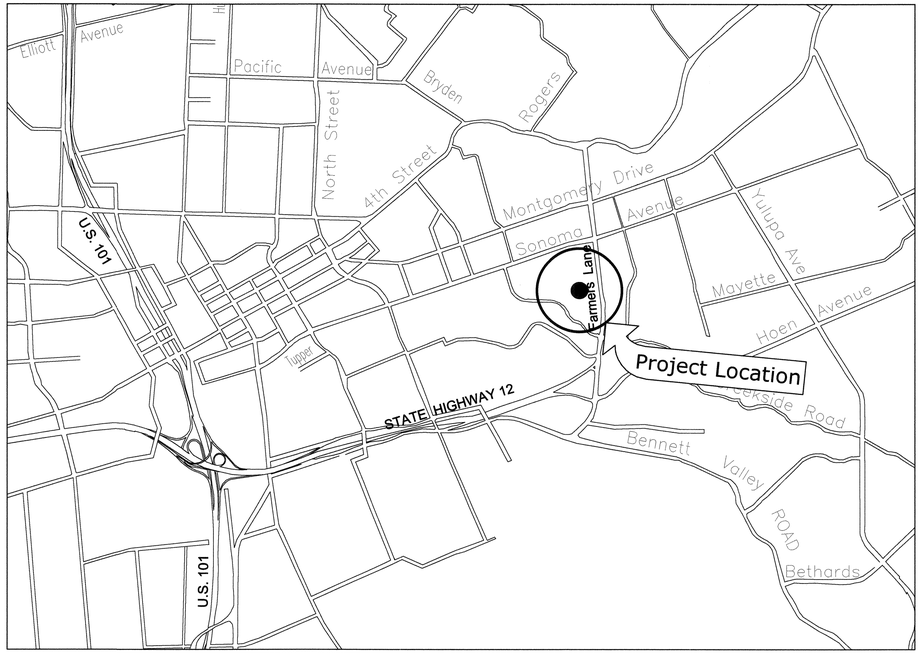

LOCATION MAP
NOT TO SCALE

INDEX TO SHEETS

Sheet No.	Title
1.	Cover Sheet and Location Plan
2.	Legend, Abbreviations, and General Notes
3.	Well 4-1 Site Work and Grading Plan
4.	Well 4-2 Site Work and Grading Plan
5.	Civil Sections and Details
6.	Well 4-1 Mechanical Layout and Well Head Modifications
7.	Well 4-2 Mechanical Layout and Well Head Modifications
8.	Mechanical Sections and Details 1
9.	Mechanical Sections and Details 2
10.	Well 4-1 Elevations
11.	Well 4-2 Elevations
12.	Well 4-1 and 4-2 Floor Plans
13.	Architectural Details and Schedules
14.	General Notes and Specifications
15.	Statement of Special Inspections
16.	Typical Details
17.	Well 4-1 and 4-2 Foundation Plans
18.	Well 4-1 and 4-2 Roof Framing Plans
19.	Building Sections
20.	Foundation Sections and Details
21.	Roof Framing Sections and Details
22.	Electrical Symbols & Abbreviations
23.	Well 4 Meter/Main Switchboard (MMS) One Line Diagram
24.	Well 4 Meter/Main Switchboard (MMS) Elevation
25.	VFD PNL4111 &4211 Elevation
26.	Well Pump Elementary Diagram
27.	Control Panel Elevation & Layout
28.	Control Panel Elementary Diagrams
29.	Example Interconnect Diagram
30.	Typical Electrical Details No 1
31.	Typical Electrical Details No 2
32.	Panelboards, Lighting Schedule & General Notes
33.	Electrical Overall Site Plan
34.	Well 4-1 Electrical Site Plan
35.	Well 4-2 Electrical Site Plan
36.	Existing Water Treatment Plant Electrical Plan
37.	Instrumentation Symbols & Abbreviations
38.	Well 4-1 P&ID
39.	Well 4-2 P&ID
40.	Auxiliary Systems P&ID

July, 2017

RECORD PLAN DATA

PROJECT START:
PROJECT END:
GEN. CONTRACTOR:
SUPERINTENDENT:
UNDERGROUND CONTRACTOR:
FOREMAN:
SEWER PIPE TYPE:
MANUFACTURER:
SEWER FITTINGS MANUFACTURER:
M.H. MANUFACTURER:
WATER PIPE TYPE:
MANUFACTURER:
WATER VALVE MANUFACTURER:
WATER FITTINGS MANUFACTURER:

WATER SERVICE TYPE:
MANUFACTURER:
FIRE HYDRANT TYPE:
MANUFACTURER:
INSPECTOR:
CONSTRUCTION MANAGER:
RECORD PLANS BY:
ADDITIONAL INFO:

BEFORE EXCAVATING
CALL U.S.A.
UNDERGROUND SERVICE ALERT
800-642-2444
TWO WORKING DAYS BEFORE ALL
PLANNED WORK OPERATIONS

REGISTERED PROFESSIONAL ENGINEER
JAMES P. CONNELL
No. 68052
Exp. 6-30-18
CIVIL
STATE OF CALIFORNIA

07/21/2017

NO.	DATE	REVISION	BY	DEPT.	SIGNATURE	DATE
				DESIGN/CONST		8/1/17
				SURVEY		8/1/17
				PW FIELD SVC'S		
				UTILITIES OP'S		7/31/17
				TRAFFIC		
				PARKS		

SCALE: AS SHOWN
DWN BY: JRR
DATE: July, 2017
CHK BY: JPC

APPROVED: *Acting Deputy Director – Engineering*
By _____ Date 8/1/17
Andrew Allen

CITY OF SANTA ROSA
FARMERS LANE WELL FACILITIES
REHABILITATION

COVER SHEET AND LOCATION PLAN

CONTRACT NO.
C01839

SHEET 1 OF 40

FILE NO. 2017-0014

WELL REHABILITATION

O:\Clients\405 city of santa rosa\12-15-53 farmers phase 2\CAD\production\405-12-15-53-Sht01-02.dwg 7/21/2017 8:45 AM jriedel

ABBREVIATIONS

AB	AGGREGATE BASE
AC	ASPHALT CONCRETE
ACP	ASBESTOS CEMENT PIPE
AL	ALUMINUM
APN	ASSESSORS PARCEL NUMBER
ARV	AIR RELEASE VALVE
BLK	BLACK
BFV	BUTTERFLY VALVE
BTC	BELOW TOP OF CASING
CATV	CABLE TV
CC	CONCRETE CYLINDER, SEE WATER NOTE 19, THIS SHEET
CDF	CONTROLED DENSITY FILL
CI	CAST IRON
CIP	CAST IRON PIPE
CL or ℄	CENTER LINE
CMLC	CEMENT MORTAR LINED & COATED
CONC	CONCRETE
CONT	CONTINUOUS
CO	CLEAN OUT
CLR	CLEAR
CR	CIRCLE
CT	COURT
DI	DRAIN INLET
DIA	DIAMETER
DIP	DUCTILE IRON PIPE
DR	DRAIN, DRIVE
DWG	DRAWING
EA	EACH
EF	EACH FACE
EJF	EXSPANSION JOINT FILLER
EL	ELEVATION
ELECT, E	ELECTRIC
ELB, ELL	ELBOW
EP	EDGE OF PAVEMENT
EW	EACH WAY
EX,	EXIST EXISTING
F/C	FACE OF CURB
FH	FIRE HYDRANT
FL	FLOW LINE
FLG	FLANGED
FCA	FLANGED COUPLING ADAPTER
FT, '	FEET
G	GAS
GALV	GALVANIZED
GV	GATE VALVE
HC	HYDRANT CONNECTION
HGV	HORIZONTAL GATE VALVE
HORZ	HORIZONTAL
HP	HIGH PRESSURE
HT	HEIGHT
IN. "	INCH
INV	INVERT
LF	LINEAL FEET
LG	LONG
LT	LEFT
MATL	MATERIAL
MAX	MAXIMUM
MIN	MINIMUM
MJ	MECHANICAL JOINT
MMS	METER/MAIN SWITCHBOARD
OC	ON CENTER
OD	OUTSIDE DIAMETER
OF	OVERFLOW
OH	OVERHEAD
PE	PLAIN END
PERM	PERMANENT
PL	PROPERTY LINE, PLASTIC
PH#	POTHOLE #
PJF	PREFORMED JOINT FILLER
PSF	POUNDS PER SQUARE FOOT
PSI	POUNDS PER SQUARE INCH
PVC	POLY VINYL CHLORIDE
R	RADIUS
RC	RELATIVE COMPACTION
RCP	REINFORCED CONCRETE PIPE
RD	ROAD
REQ'D	REQUIRED
RT	RIGHT
S	SLOPE
SCH	SCHEDULE
SCWA	SONOMA COUNTY WATER AGENCY
SCV	SYSTEM CHECK VALVE
SD	STORM DRAIN
SIM	SIMILAR
SHT	SHEET
SQ	SQUARE
SS	SANITARY SEWER
SST	STAINLESS STEEL
ST	SERVICE TUBING
STA	STATION
STD	STANDARD
STL	STAINLESS STEEL
T&B	TOP & BOTTOM
TEL	TELEPHONE
TEMP	TEMPORARY
THK	THICK
TOC, TC	TOP OF CONCRETE/CURB
TS	TRAFFIC SIGNAL
TV	TELEVISION CABLE
TYP	TYPICAL
UNO	UNLESS NOTED OTHERWISE
V	VENT
W/	WITH
W	POTABLE WATER
WHT	WHITE
WMH	WATER MANHOLE
WM	WATER METER
YEL	YELLOW

LEGEND

LINES

BOUNDARY . . . . . .

PARCEL . . . . . .

CENTER . . . . . .

EASEMENT . . . . . .

DESCRIPTION	EXISTING	PROPOSED
SEWER LATERAL & CLEANOUT		
SEWER MAIN & MANHOLE		
ABANDONED PIPE		
STORM DRAIN, MANHOLE & CATCH BASIN	18" SD	18" SD
1" WATER SERVICE		
FIRE HYDRANT ASSEMBLY & TEE		FH
WATER	8"W	8"W-10'
GAS	3"G	
ELECTRICAL	E	E
PLUG OR CAP		6"SS
CURB & CUTTER		
FENCE		
WOOD FENCE		
DITCH/SWALE		
DIRECTION OF FLOW		
DROP INLET		
JOINT POLE & GUY ANCHOR		
STREET LIGHT		
SIGN		
DECIDUOUS TREE/SHRUBS		
MONUMENT		
SURVEY CONTROL		
CONSTRUCTION NOTES		(R1) ROADWAY RECONSTRUCT
TREE TO BE PROTECTED		
TREE OR TREES TO BE REMOVED		×
TREE TO BE PROTECTED OR REPLACED		

VALVES	DOUBLE LINE	SINGLE LINE
CHECK		
GATE		
PRESSURE REDUCING		

JOINTS

FLANGED . . . . . |

MECHANICAL . . . . . |

BENCHMARK

CITY OF SANTA ROSA VERTICAL CONTROL NETWORK BENCHMARK E-34, ESTABLISHED FEBRUARY 1991 (BASED UPON NGVD 29). ELEVATION: 95.54 FEET

BASIS OF BEARINGS

BEING NORTH 83° 08' 41" EAST BETWEEN THE CITY OF SANTA ROSA HORIZONTAL CONTROL NETWORK COORDINATE MONUMENTS G-267 & G-34. NAD 83 (2011) Epoch 2010

REGISTERED PROFESSIONAL ENGINEER
JAMES P. CONNELL
No. 63052
Exp. 6-30-18
CIVIL
STATE OF CALIFORNIA

07/21/2017

City of Santa Rosa
Transportation & Public Works

NO.	DATE	REVISION	BY

SCALE: AS SHOWN
DWN BY: JRR
DATE: July, 2017
CHK BY: JPC

APPROVED: *Acting Deputy Director - Engineering*
By _____ Date 8/1/17
Andrew Allen

CITY OF SANTA ROSA
FARMERS LANE WELL FACILITIES
REHABILITATION

LEGEND, ABBREVIATIONS, AND GENERAL NOTES

CONTRACT NO.
C01839

SHEET 2 OF 40

FILE NO. 2017-0014

WELL REHABILITATION

O:\Clients\405 city of santa rosa\12-15-53 farmers phase 2\CAD\production\405-12-15-53-Sht01-02.dwg 7/21/2017 8:45 AM jriedel

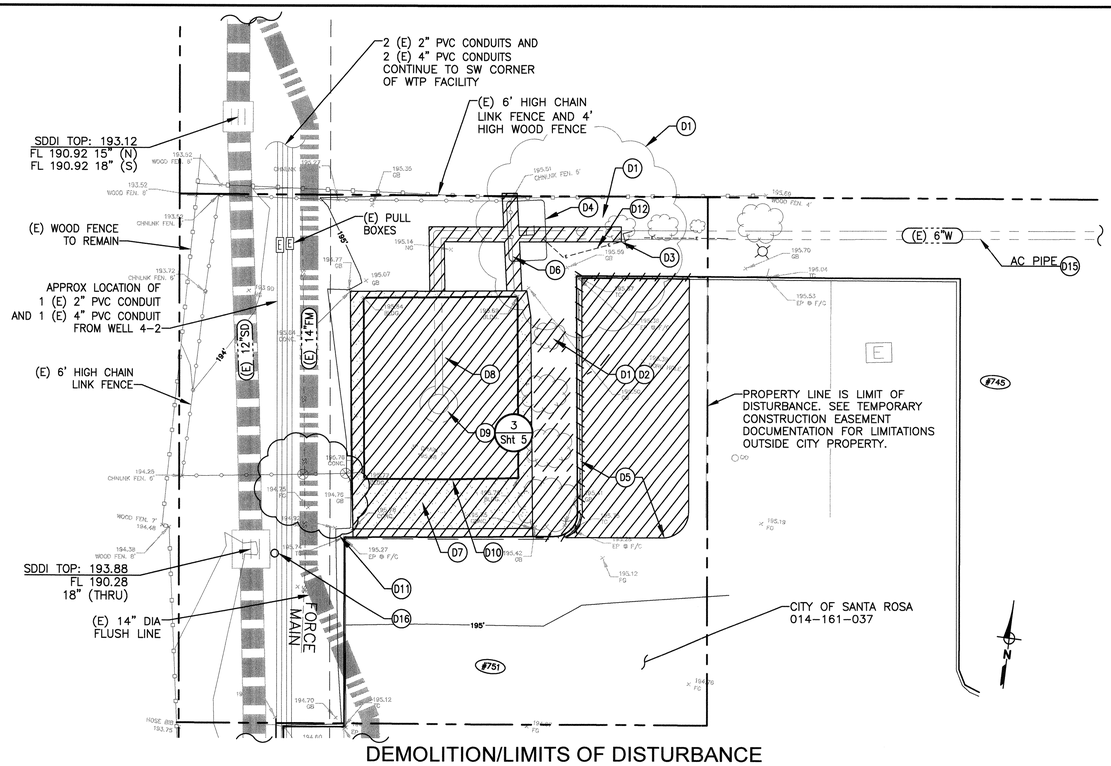

DEMOLITION NOTES

- (D1) CLEAR AND GRUB ALL VEGETATION IN WORK AREA
- (D2) RELOCATE IRRIGATION FROM WORK AREA
- (D3) DEMOLISH (E) PIPE. CUT AT LOCATION SHOWN ON SITE WORK PLAN
- (D4) REMOVE AND RELOCATE (E) ELECTRICAL PULL BOX
- (D5) DEMOLISH (E) CURB AND SAW CUT (E) ASPHALT PAVING
- (D6) DEMOLISH CHAIN LINK FENCE
- (D7) DEMOLISH CONCRETE WALK
- (D8) DEMOLISH PIPE AND VALVES
- (D9) DEMOLISH WELL HEAD AS SHOWN ON 3/Sht 5. COVER AND PROTECT (E) CASING TO REMAIN
- (D10) DEMOLISH WELL BUILDING AND FOUNDATION
- (D11) REMOVE AND REPLACE (E) CHAIN LINK FENCE AND GATE
- (D12) CUT CONDUITS AND TERMINATE PER SITE WORK PLAN
- (D15) WORK ON, AND DISPOSAL OF, ASBESTOS CEMENT PIPE SHALL CONFORM TO ALL APPLICABLE REGULATIONS.
- (D16) DEMOLISH 3" PVC DRAIN

SITE CONSTRUCTION NOTES

- (R1) 3'x5' VAULT W/6" MAG METER, SEE DETAIL A/Sht 8
- (R2) 6' HIGH CHAIN LINK FENCE, EXTEND TO BUILDING
- (R3) ELECTRICAL PULL BOX. TERMINATE (E) CONDUITS. (E) CABLES/AIR HOSE TO REMAIN IN PULL BOX. CITY TO FIELD LOCATE
- (R4) CONNECT (E) DRAINAGE STRUCTURE TO FLOOR DRAIN AND UNDERDRAIN
- (R5) CURB AND GUTTER PER CITY STANDARD 241, REPAIR ASPHALT PAVING WHERE DAMAGED
- (R6) CONCRETE WALKWAY, SEE DETAIL 10/Sht 16
- (R7) REPLACE FENCE AND GATE POSTS, REUSE FABRIC AND GATE, EXTEND TO BUILDING
- (R8) WELL HOUSE, SEE OTHER DRAWINGS FOR DETAILS
- (R17) CONCRETE LANDING, SEE DETAIL 1/Sht 5
- (R18) ELECTRICAL PULL BOX, SEE ELECTRICAL SHEETS
- (R19) COAT ALL NUTS, BOLTS, AND RESTRAINING RODS WITH BITUMASTIC. WRAP PIPE, FITTINGS, AND VALVES WITH 8-MIL POLYETHYLENE PER SPECIFICATIONS. BED PIPE IN CDF PER CITY STANDARD 215

07/21/2017

REGISTERED PROFESSIONAL ENGINEER
JAMES P. CONNELL
No. 63052
Exp. 6-30-18
CIVIL
STATE OF CALIFORNIA

City of Santa Rosa
Transportation & Public Works

NO.	DATE	REVISION	BY

SCALE: AS SHOWN
DWN BY: JRR
DATE: July, 2017
CHK BY: JPC

APPROVED: *Acting Deputy Director – Engineering*
By *Andrew Allen* Date 8/1/17

CITY OF SANTA ROSA
FARMERS LANE WELL FACILITIES
REHABILITATION

Well 4-1 Site Work and Grading Plan

CONTRACT NO. C01839
SHEET 3 OF 40
FILE NO. 2017-0014

WELL REHABILITATION

O:\Clients\405 city of santa rosa\12-15-53 farmers phase 2\CAD\production\405-12-15-53-Sht03-04.dwg 7/21/2017 8:45 AM jriedel

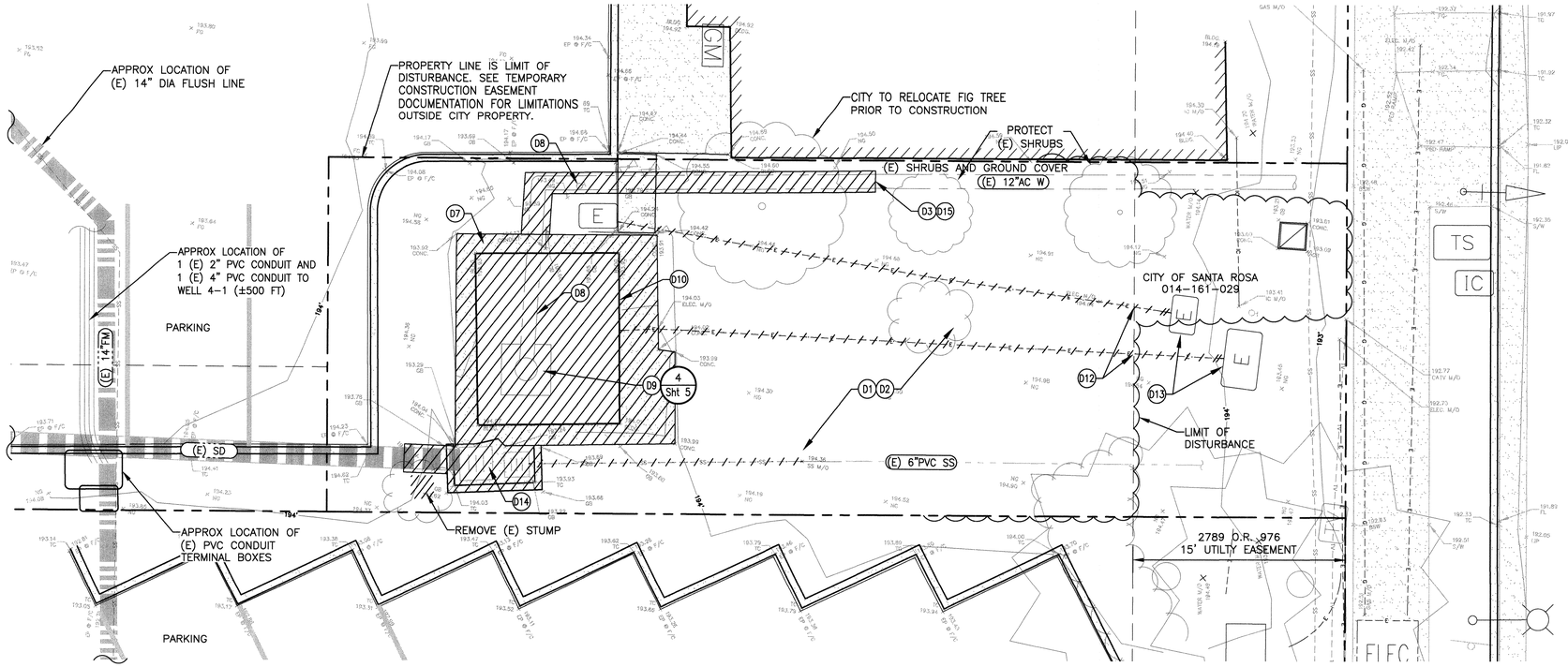

DEMOLITION/LIMITS OF DISTURBANCE

SCALE: 1" = 5'

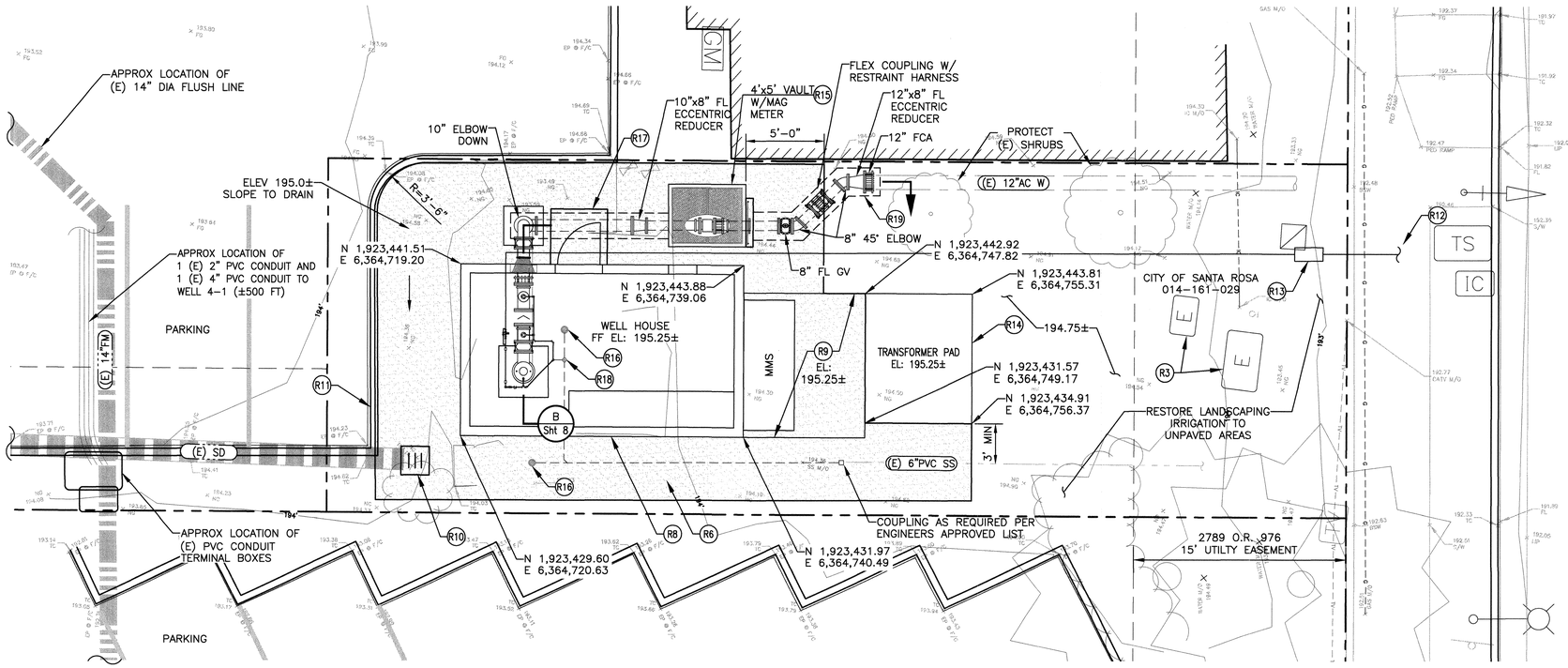

SITE WORK AND GRADING PLAN

SCALE: 1" = 5'

DEMOLITION NOTES

- D1 CLEAR AND GRUB ALL VEGETATION IN WORK AREA EXCEPT WHERE NOTED
- D2 RELOCATE IRRIGATION FROM WORK AREA
- D3 DEMOLISH (E) PIPE. CUT AT LOCATION SHOWN ON SITE WORK PLAN
- D7 DEMOLISH CONCRETE WALK
- D8 DEMOLISH PIPE AND VALVES
- D9 DEMOLISH WELL HEAD AS SHOWN ON 4/Sht 5. COVER AND PROTECT (E) CASING TO REMAIN
- D10 DEMOLISH WELL BUILDING AND FOUNDATION
- D12 CUT CONDUITS AND TERMINATE PER SITE WORK PLAN
- D13 LOCATE (E) POWER SUPPLY AND CONTROL CONDUIT PULL BOXES. PULL CABLES BACK FROM PUMP STATION AND LEAVE IN TERMINAL PULL BOX.
- D14 DEMOLISH (E) DRAIN INLETS AND PIPES TO LIMITS SHOWN ON SITE WORK PLAN
- D15 WORK ON, AND DISPOSAL OF, ASBESTOS CEMENT PIPE SHALL CONFORM TO ALL APPLICABLE REGULATIONS.

SITE CONSTRUCTION NOTES

- R3 ELECTRICAL PULL BOXES. TERMINATE (E) CONDUITS. (E) CABLES TO REMAIN IN PULL BOX. CITY TO FIELD LOCATE
- R6 CONCRETE WALKWAY, SEE DETAIL 10/Sht 16
- R8 WELL HOUSE, SEE OTHER DRAWINGS FOR DETAILS
- R9 PROVIDE PAD(~10'x7'-8") FOR ELECTRICAL GEAR, SIZE TO MATCH ELECTRICAL GEAR AND PG&E REQUIREMENTS
- R10 PROVIDE DRAIN INLET(MATCH EXISTING). CONNECT TO EXISTING 12" OR 15" PIPE AND UNDERDRAIN. CONTRACTOR TO VERIFY (E) PIPE DIAMETER.
- R11 EXISTING CURB TO REMAIN
- R12 PROVIDE 1" HDPE WATER SERVICE AND METER. CITY TO FIELD LOCATE
- R13 ABOVE GROUND BACKFLOW PREVENTION DEVICE (CITY STANDARD 874) WITH ENCLOSURE (CITY STANDARD 114). CITY TO FIELD LOCATE
- R14 PROVIDE TRANSFORMER PAD (~7'-6"x9') AND CONDUITS WITH PULL CORDS. SEE ELECTRICAL SHEETS. POWER COMPANY WILL PLACE TRANSFORMER, PULL CABLES THROUGH CONDUITS AND MAKE METER CONNECTIONS
- R15 4'x5' VAULT W/8" MAG METER, SEE DETAIL B/Sht 8
- R16 CLEANOUT PER CITY STANDARD 513
- R17 CONCRETE LANDING, SEE DETAIL 1/Sht 5
- R18 FLOOR DRAIN, SEE DETAIL 7/Sht 9
- R19 COAT ALL NUTS, BOLTS, AND RESTRAINING RODS WITH BITUMASTIC. WRAP PIPE, FITTINGS, AND VALVES WITH 8-MIL POLYETHYLENE PER SPECIFICATIONS. BED PIPE IN CDF PER CITY STANDARD 215

REGISTERED PROFESSIONAL ENGINEER
JAMES P. CONNELL
No. 63052
Exp. 6-30-18
CIVIL
STATE OF CALIFORNIA
07/21/2017

City of Santa Rosa
Transportation & Public Works

NO.	DATE	REVISION	BY

SCALE: AS SHOWN
DWN BY: JRR
DATE: July, 2017
CHK BY: JPC

APPROVED: Acting Deputy Director - Engineering
By Andrew Allen Date 8/1/17

CITY OF SANTA ROSA
FARMERS LANE WELL FACILITIES REHABILITATION

Well 4-2 Site Work and Grading Plan

CONTRACT NO. C01839

SHEET 4 OF 40

FILE NO. 2017-0014

WELL REHABILITATION

O:\Clients\405 city of santa rosa\12-15-53 farmers phase 2\CAD\production\405-12-15-53-Sht03-04.dwg 7/21/2017 8:45 AM jriedel

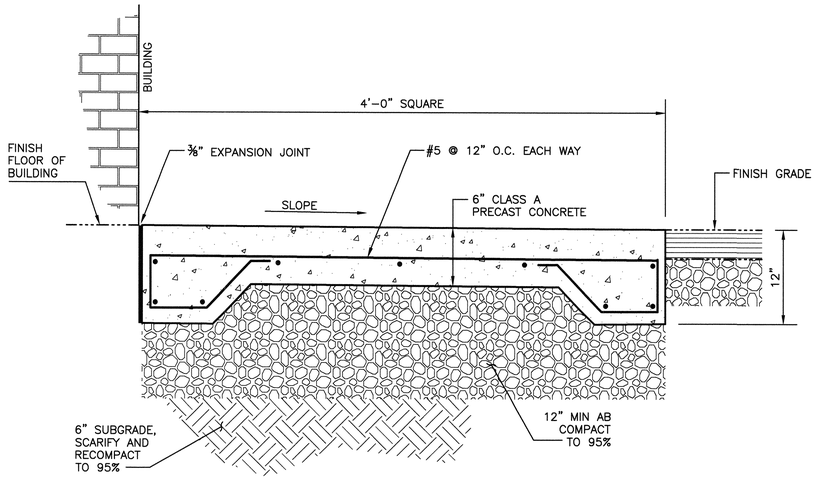

NOTES:
1. PROVIDE ½" ROUND FILLET OR CHAMFER ON ALL EDGES.
2. SURFACE FINISH SHALL BE LIGHT DELAYED BRUSHING, PARALLEL WITH BUILDING WALL.

CONCRETE LANDING

DETAIL 1/VAR

NOT TO SCALE

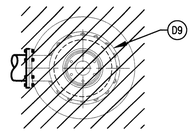

PLAN

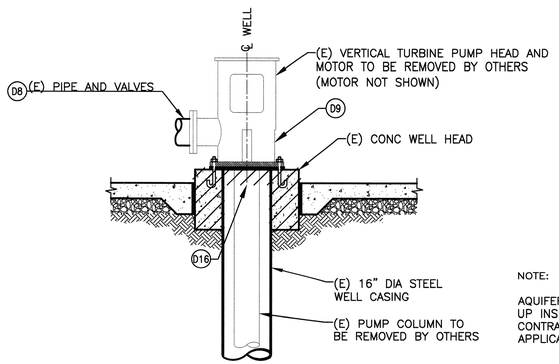

SECTION

WELL 4–1 (E) WELL HEAD

DETAIL 3/3

NOT TO SCALE

NOTE:

AQUIFER IS ARTESIAN AND GROUNDWATER MAY FLOW UP INSIDE AND OUTSIDE OF CASING INTO EXCAVATION. CONTRACTOR SHALL DEWATER EXCAVATION PER APPLICABLE REGULATIONS AND THE SPECIFICATIONS

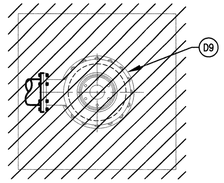

PLAN

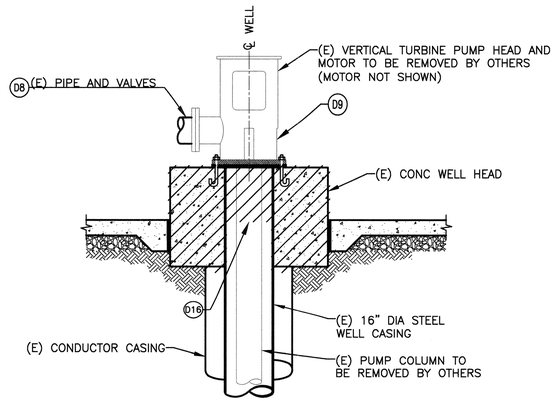

SECTION

WELL 4–2 (E) WELL HEAD

DETAIL 4/4

NOT TO SCALE

DEMOLITION NOTES

D8 DEMOLISH PIPE AND VALVES

D9 DEMOLISH WELL HEAD AS DETAILS ON 3/– & 4/–. COVER AND PROTECT (E) CASING TO REMAIN

D16 CUT (E) CONDUCTOR, CASING PIPE, AND LINER (IF ANY) TO MATCH WELL HEAD MODIFICATIONS ON SHEETS 6 AND 7

07/21/2017

REGISTERED PROFESSIONAL ENGINEER
JAMES P. CONNELLY
No. 63052
Exp. 6-30-18
CIVIL
STATE OF CALIFORNIA

City of Santa Rosa
Transportation & Public Works

NO.	DATE	REVISION	BY

SCALE: AS SHOWN
DWN BY: JRR
DATE: July, 2017
CHK BY: JPC

APPROVED: Acting Deputy Director – Engineering
By Andrew Allen Date 8/1/17

CITY OF SANTA ROSA
FARMERS LANE WELL FACILITIES
REHABILITATION

CIVIL SECTIONS AND DETAILS

CONTRACT NO.
C01839

SHEET 5 OF 40

FILE NO. 2017–0014

WELL REHABILITATION

O:\Clients\405 city of santa rosa\12-15-53 farmers phase 2\CAD\production\405-12-15-53-Sht05.dwg 7/11/2017 3:48 PM jriedel

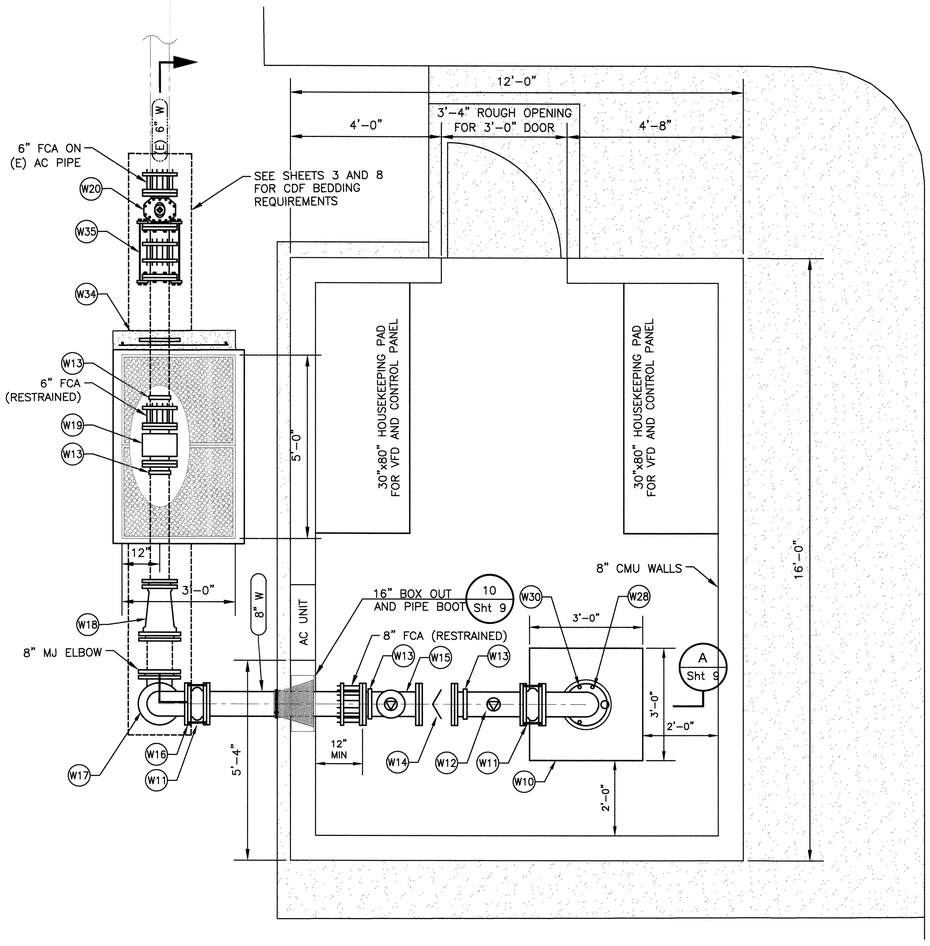

WELL 4–1

MECHANICAL LAYOUT

SCALE: 1/2" = 1'–0"

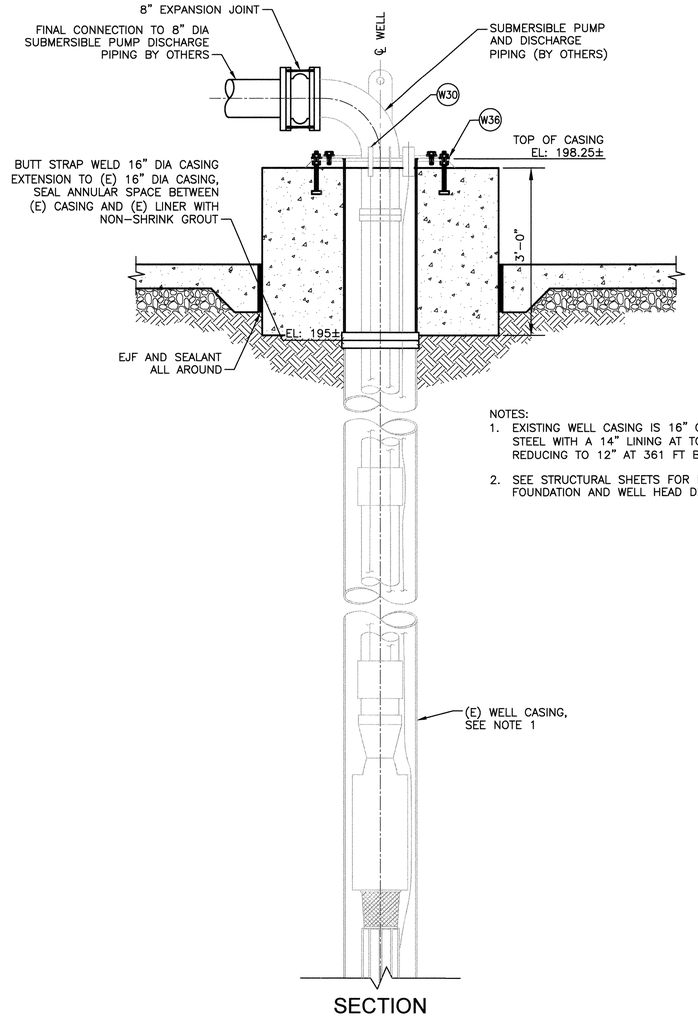

NOTES:
1. EXISTING WELL CASING IS 16" OD STEEL WITH A 14" LINING AT TOP, REDUCING TO 12" AT 361 FT BTC±.
2. SEE STRUCTURAL SHEETS FOR FLOOR, FOUNDATION AND WELL HEAD DETAILS.

SECTION

WELL 4–1 WELL HEAD MODIFICATIONS

DETAIL 1/—

NOT TO SCALE

NOTES

- W10 MODIFY WELL CASING AND CONDUCTOR AND CONSTRUCT WELL HEAD PER DETAIL 1/–
- W11 8" EXPANSION COUPLING, FULLY RESTRAINED
- W12 1" COMBINATION AIR RELEASE/AIR VACUUM VALVE PER DETAIL 6/Sht 8
- W13 PIPE SUPPORT PER DETAIL 3/Sht 8
- W14 8" SILENT CHECK VALVE
- W15 8"x4" TEE WITH AIR RELEASE VALVE, PRESSURE GAUGE, AND PRESSURE SENSOR PER DETAIL 5/Sht 8
- W16 INSULATING FLANGE PER DETAIL 4/Sht 8
- W17 8" FLANGED ELBOW
- W18 8"x6" MJ REDUCER
- W19 6" MAGNETIC FLOW METER
- W20 6" FL GATE VALVE
- W28 1" CASING VENT AND AIR VACUUM VALVE SIMILAR TO DETAIL 6/Sht 8
- W30 LEVEL SENSOR AND 1" SEALED GLAND FITTING. COUPLING AND SOUNDING TUBE BY OTHERS
- W34 CONCRETE THRUST COLLAR, SEE DETAIL 12/Sht 9
- W35 FLEX COUPLING WITH RESTRAINT HARNESS, SEE DETAIL 13/Sht 9
- W36 PUMP MOUNTING BASE, SEE DETAIL 14/Sht 9

07/21/2017

REGISTERED PROFESSIONAL ENGINEER
JAMES P. CONNELLY
No. 63052
Exp. 6-30-18
CIVIL
STATE OF CALIFORNIA

City of Santa Rosa
Transportation & Public Works

NO.	DATE	REVISION	BY

SCALE: AS SHOWN
DWN BY: JRR
DATE: July, 2017
CHK BY: JPC

APPROVED: Acting Deputy Director – Engineering
By _____ Date 6/1/17
Andrew Allen

CITY OF SANTA ROSA
FARMERS LANE WELL FACILITIES REHABILITATION

Well 4-1 Mechanical Layout and Well Head Modifications

CONTRACT NO. C01839

SHEET 6 OF 40

FILE NO. 2017–0014

WELL REHABILITATION

O:\Clients\405 city of santa rosa\12-15-53 farmers phase 2\CAD\production\405-12-15-53-Sht06-07.dwg 7/19/2017 11:59 AM jriedel

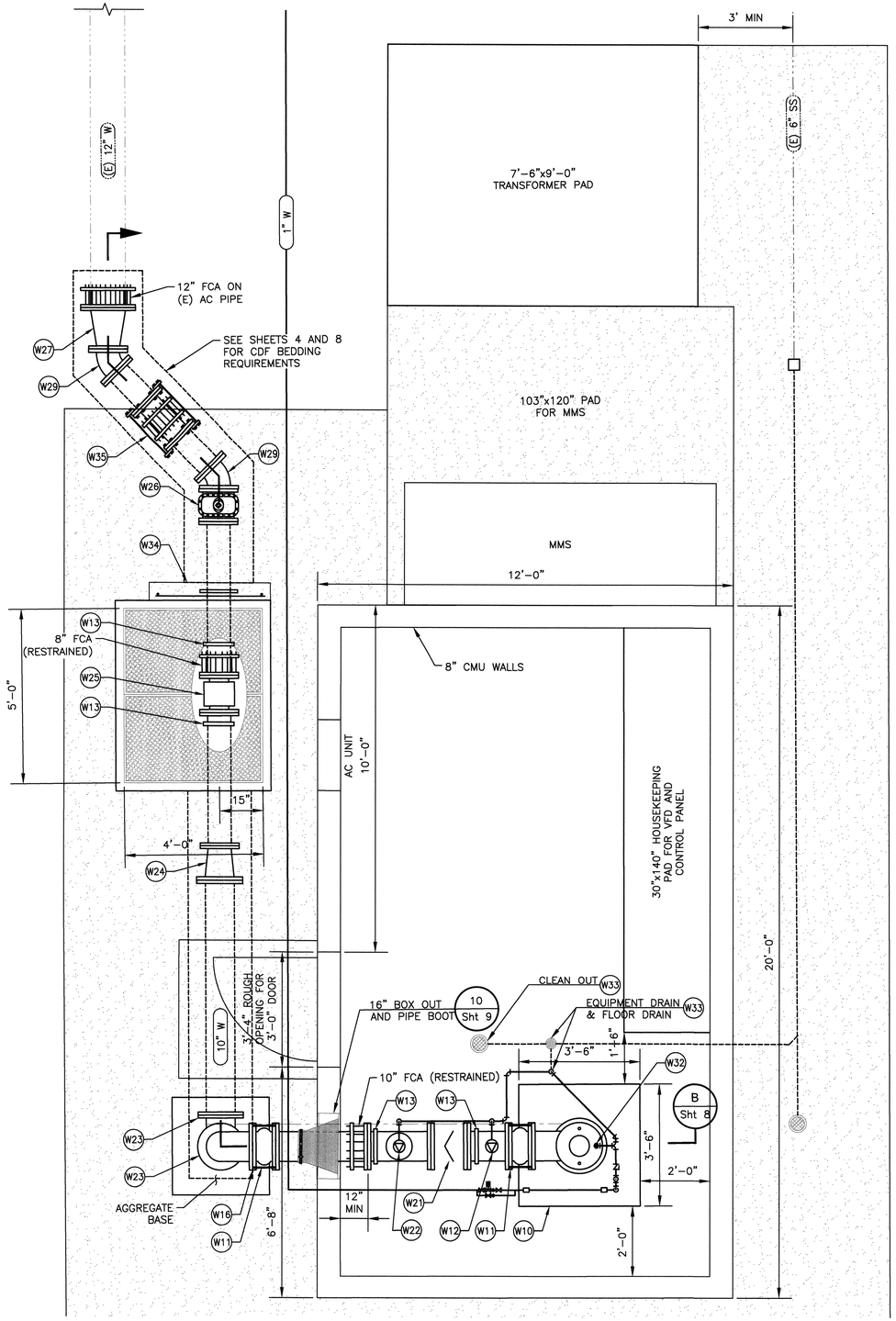

WELL 4-2

MECHANICAL LAYOUT

SCALE: 1/2" = 1'-0"

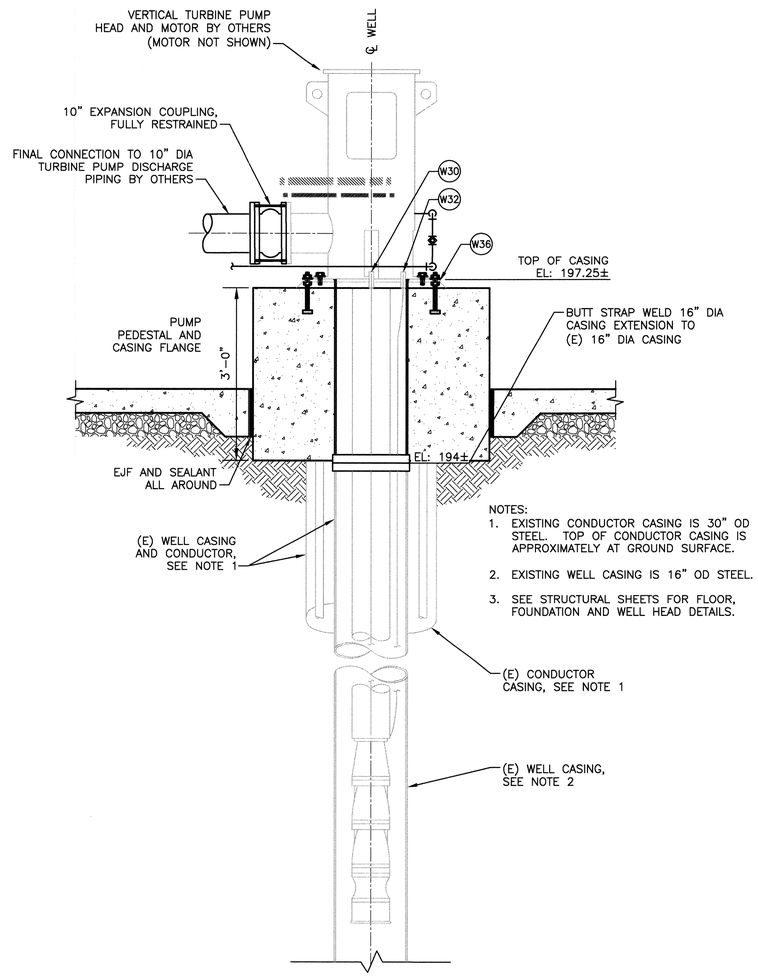

SECTION

WELL 4-2 WELL HEAD MODIFICATIONS

DETAIL 1/—

NOT TO SCALE

NOTES

- W10 MODIFY WELL CASING AND CONDUCTOR AND CONSTRUCT WELL HEAD PER DETAIL 1/—
- W11 10" EXPANSION COUPLING, FULLY RESTRAINED
- W12 1" COMBINATION AIR RELEASE/AIR VACUUM VALVE PER DETAIL 6/Sht 8
- W13 PIPE SUPPORT PER DETAIL 3/Sht 8
- W16 INSULATING FLANGE PER DETAIL 4/Sht 8
- W21 10" SILENT CHECK VALVE
- W22 10"x4" TEE WITH AIR RELEASE VALVE, PRESSURE GAUGE, AND PRESSURE SENSOR PER DETAIL 5/Sht 8
- W23 10" FLANGED ELBOW
- W24 10"x8" FL ECCENTRIC REDUCER
- W25 8" MAGNETIC FLOW METER
- W26 8" FL GATE VALVE
- W27 12"x8" FL ECCENTRIC REDUCER, CONNECT TO (E) AC PIPE WITH FCA
- W29 8" FL 45° ELBOW
- W30 LEVEL SENSOR AND 1" SEALED GLAND FITTING. COUPLING AND SOUNDING TUBE BY OTHERS
- W32 CASING VENT AND DRAIN, PER DETAIL 9/Sht 9
- W33 EQUIPMENT DRAIN, SEE DETAIL 8/Sht 9, FLOOR DRAIN, PER DETAIL 7/Sht 9, AND CLEANOUT (CITY STANDARD 513)
- W34 CONCRETE THRUST COLLAR, SEE DETAIL 12/Sht 9
- W35 FLEX COUPLING WITH RESTRAINT HARNESS, SEE DETAIL 13/Sht 9
- W36 PUMP MOUNTING BASE, SEE DETAIL 14/Sht 9

07/21/2017

REGISTERED PROFESSIONAL ENGINEER
JAMES P. CONNELLY
No. 63052
Exp. 6-30-18
CIVIL
STATE OF CALIFORNIA

City of Santa Rosa
Transportation & Public Works

NO.	DATE	REVISION	BY

SCALE: AS SHOWN
DWN BY: JRR
DATE: July, 2017
CHK BY: JPC

APPROVED: Acting Deputy Director – Engineering
By Andrew Allen Date 8/1/17

CITY OF SANTA ROSA
FARMERS LANE WELL FACILITIES
REHABILITATION

Well 4-2 Mechanical Layout and Well Head Modifications

CONTRACT NO. C01839

SHEET 7 OF 40

FILE NO. 2017-0014

WELL REHABILITATION

O:\Clients\405 city of santa rosa\12-15-53 farmers phase 2\CAD\production\405-12-15-53-Sht06-07.dwg 7/19/2017 11:59 AM jriedel

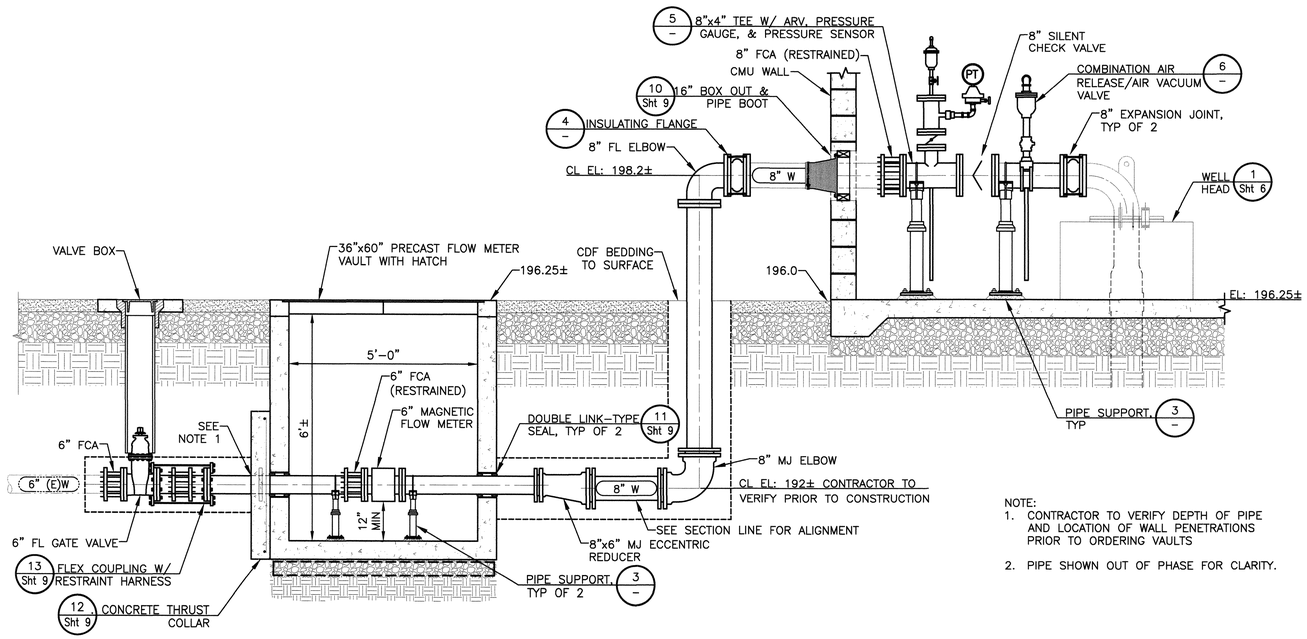

WELL 4–1

SECTION A Sht 3

SCALE: 1/2"=1'-0"

NOTE:
1. CONTRACTOR TO VERIFY DEPTH OF PIPE AND LOCATION OF WALL PENETRATIONS PRIOR TO ORDERING VAULTS
2. PIPE SHOWN OUT OF PHASE FOR CLARITY.

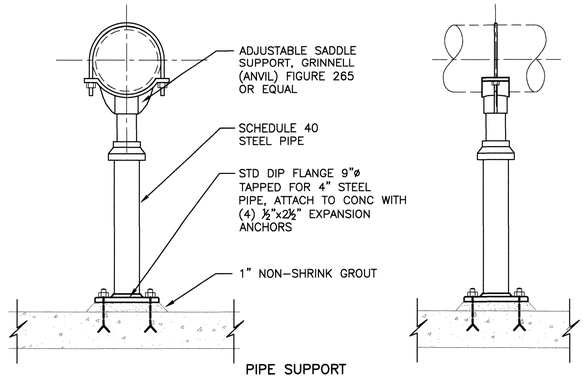

PIPE SUPPORT

DETAIL 3 VAR

NOT TO SCALE

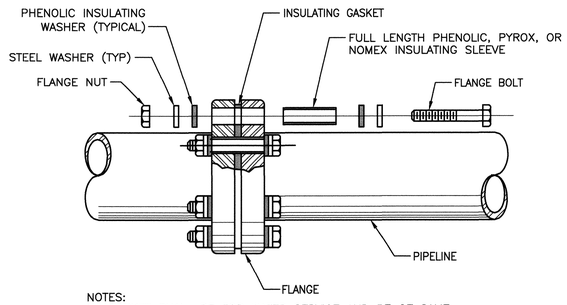

NOTES:
1. GASKET SHALL BE FOR WATER SERVICE AND BE OF SAME PRESSURE RATING AS THE FLANGE.
2. ALL BOLTS, NUTS & WASHERS SHALL BE LOW ALLOY HIGH STRENGTH.

INSULATING FLANGE

DETAIL 4 VAR

NOT TO SCALE

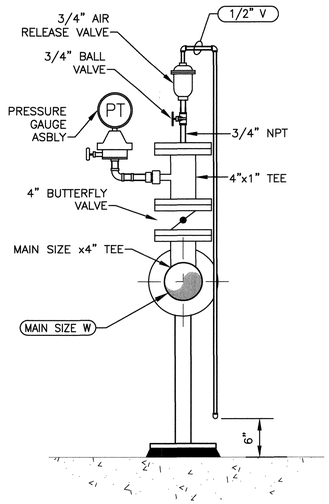

TEE WITH ARV, PRESSURE GAUGE & SENSOR

DETAIL 5 VAR

NOT TO SCALE

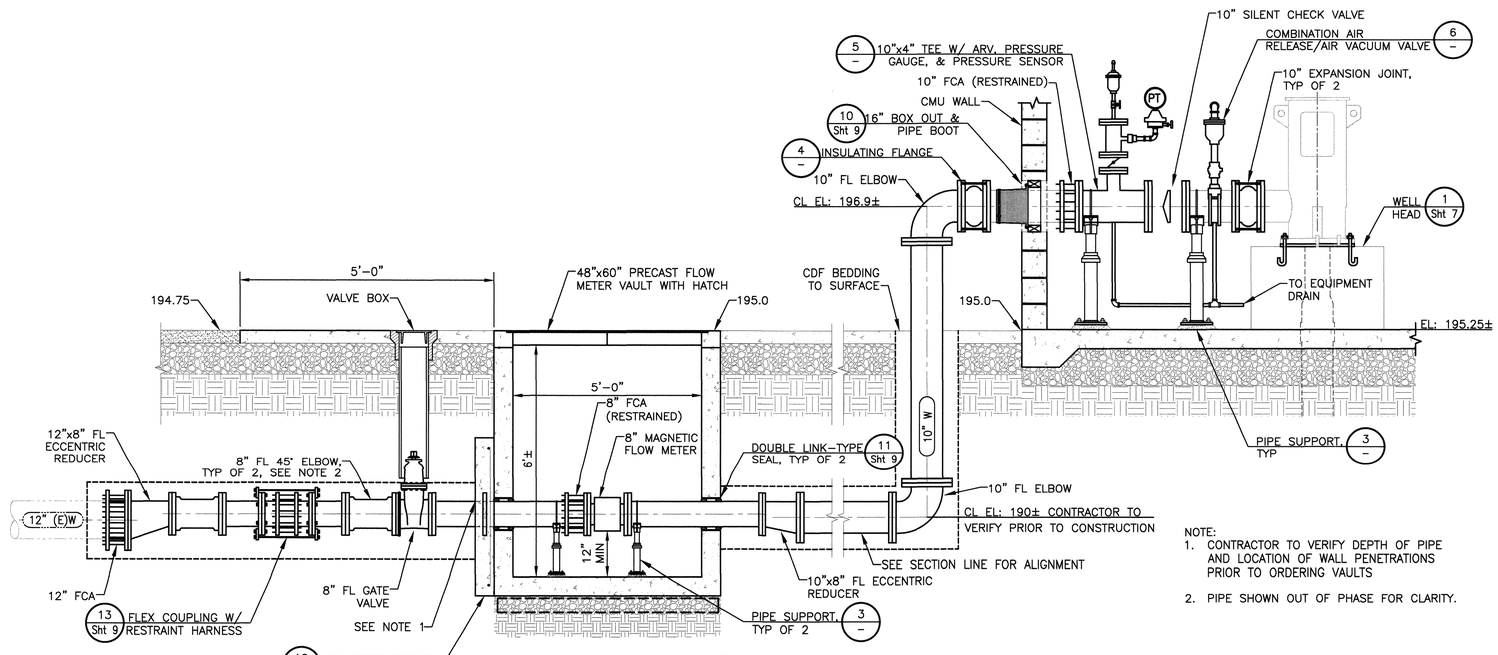

WELL 4–2

SECTION B Sht 4

SCALE: 1/2"=1'-0"

NOTE:
1. CONTRACTOR TO VERIFY DEPTH OF PIPE AND LOCATION OF WALL PENETRATIONS PRIOR TO ORDERING VAULTS
2. PIPE SHOWN OUT OF PHASE FOR CLARITY.

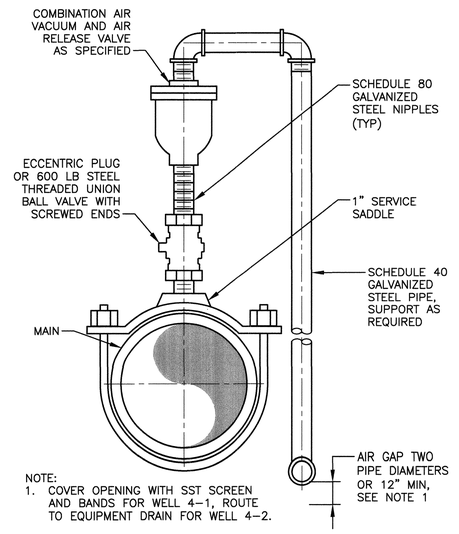

NOTE:
1. COVER OPENING WITH SST SCREEN AND BANDS FOR WELL 4–1, ROUTE TO EQUIPMENT DRAIN FOR WELL 4–2.

COMBINATION AIR RELEASE/AIR VACUUM VALVE

DETAIL 6 VAR

NOT TO SCALE

REGISTERED PROFESSIONAL ENGINEER JAMES P. CONNELLY No. 63052 Exp. 6-30-18 CIVIL STATE OF CALIFORNIA

07/21/2017

City of Santa Rosa Transportation & Public Works

NO.	DATE	REVISION	BY

DATE: July, 2017
SCALE: AS SHOWN
DWN BY: JRR
CHK BY: JPC

APPROVED: Acting Deputy Director – Engineering
By Andrew Allen Date 8/1/17

CITY OF SANTA ROSA
FARMERS LANE WELL FACILITIES REHABILITATION

MECHANICAL SECTIONS AND DETAILS 1

CONTRACT NO. C01839

SHEET 8 OF 40

FILE NO. 2017-0014

WELL REHABILITATION

O:\Clients\405 city of santa rosa\12-15-53 farmers phase 2\CAD\production\405-12-15-53-Sht08-10.dwg 7/21/2017 10:10 AM jriedel

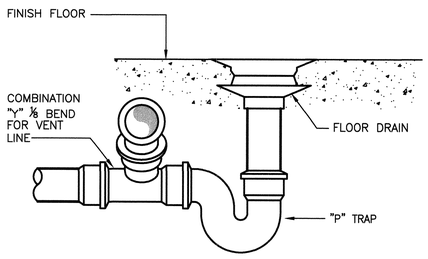

FLOOR DRAIN

DETAIL 7 / Sht 7

NOT TO SCALE

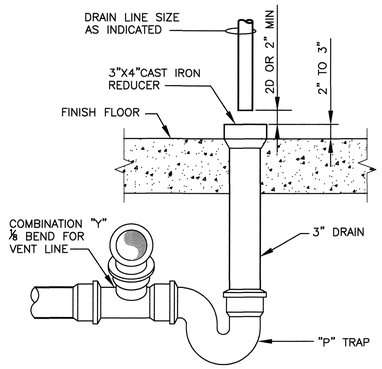

EQUIPMENT DRAIN (HUB)

DETAIL 8 / Sht 7

NOT TO SCALE

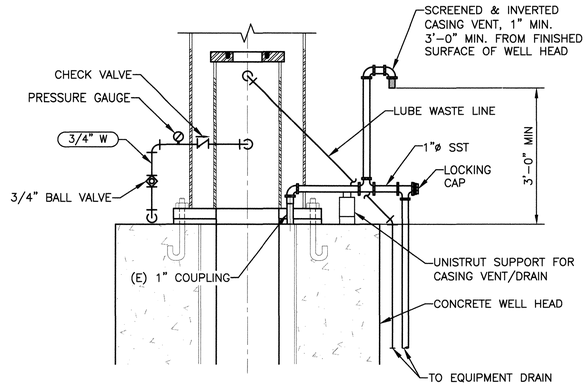

CASING VENT AND DRAIN

DETAIL 9 / Sht 7

NOT TO SCALE

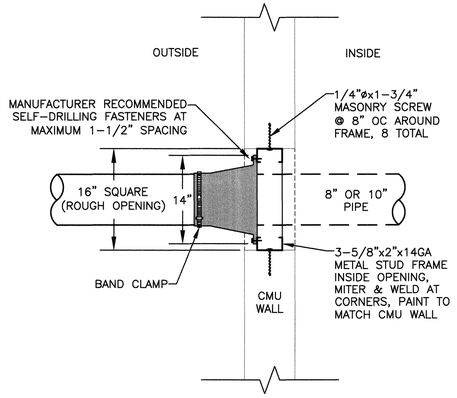

16" BOX OUT AND PIPE BOOT

DETAIL 10 / VAR

NOT TO SCALE

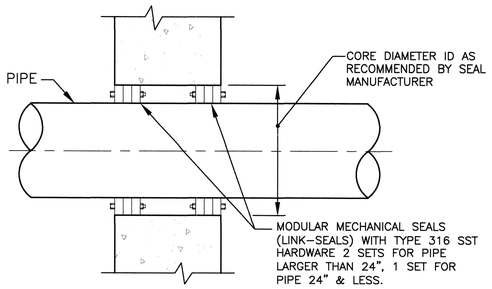

LINK-SEAL PIPE PENETRATION

DETAIL 11 / VAR

NOT TO SCALE

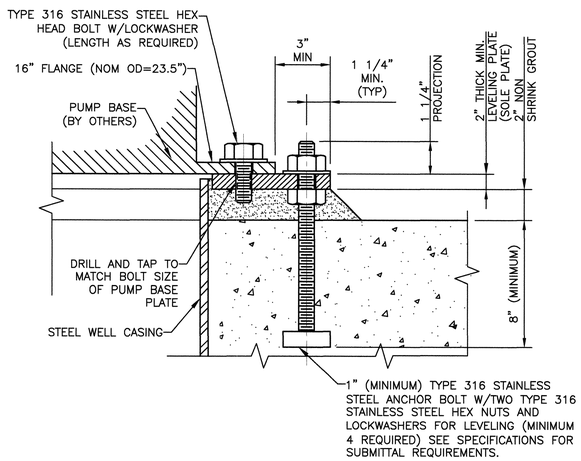

PUMP MOUNTING BASE

DETAIL 14 / VAR

NOT TO SCALE

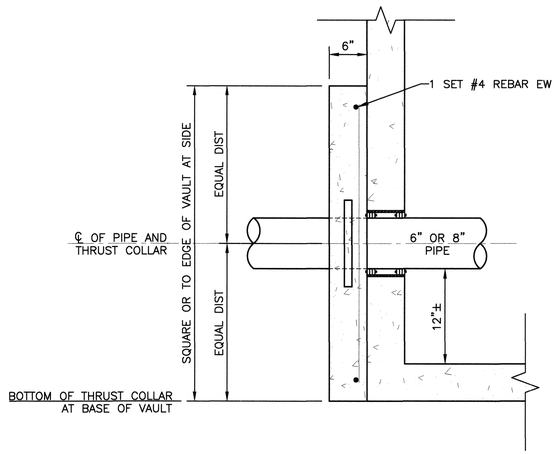

CONCRETE THRUST COLLAR

DETAIL 12 / VAR

NOT TO SCALE

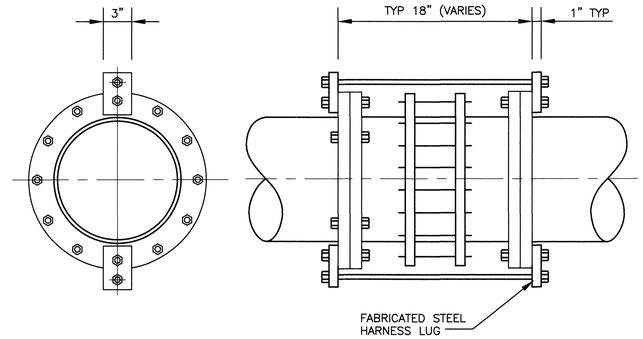

PIPE DIAMETER	NO OF TIE BOLTS	DIA OF TIE BOLTS	REMARKS
6"	2	¾"	1. HARNESS LUG DESIGN CRITERIA PER AWWA MANUAL M11 3RD EDITION (150 PSI)
8"	2	¾"	
10"	2	¾"	
12"	2	¾"	2. SST BOLTS & NUTS FOR BURIED INSTALLATION
14"	2	¾"	
16"	2	1"	
18"	2	1"	3. WAX TAPE WRAP W/ POLYETHYLENE SHEET OVERWRAP FOR BURIED INSTALLATION
20"	2	1"	

FLEX COUPLING W/RESTRAINT HARNESS

DETAIL 13 / VAR

NOT TO SCALE

REGISTERED PROFESSIONAL ENGINEER JAMES P. CONNELLY No. 63052 Exp. 6-30-18 CIVIL STATE OF CALIFORNIA

07/21/2017

City of Santa Rosa
Transportation & Public Works

NO.	DATE	REVISION	BY

DATE: July, 2017
CHK BY: JPC
SCALE: AS SHOWN
DWN BY: JRR

APPROVED: *Acting Deputy Director – Engineering*
By Andrew Allen Date 8/1/17

CITY OF SANTA ROSA
FARMERS LANE WELL FACILITIES REHABILITATION

MECHANICAL SECTIONS AND DETAILS 2

CONTRACT NO. C01839

SHEET 9 OF 40

FILE NO. 2017-0014

WELL REHABILITATION

O:\Clients\405 city of santa rosa\12-15-53 farmers phase 2\CAD\production\405-12-15-53-Sht08-10.dwg 7/21/2017 10:10 AM jriedel

SHEET NOTES:

1. SEE PROJECT SPECIFICATIONS FOR DOOR REQUIREMENTS AND SHEET 13 FOR DOOR DETAILS & DOOR SCHEDULE.

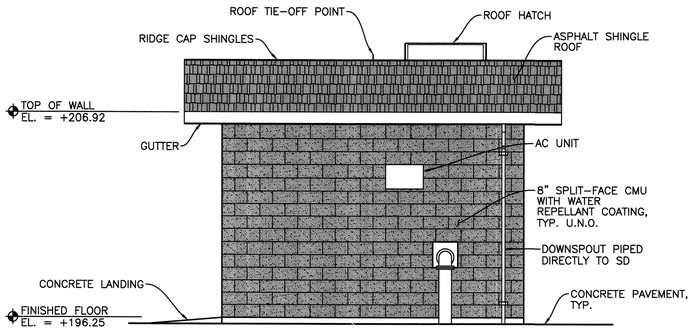

NORTH ELEVATION
1/4" = 1'-0"

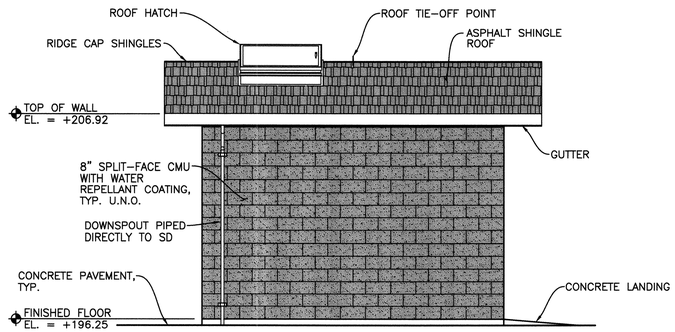

SOUTH ELEVATION
1/4" = 1'-0"

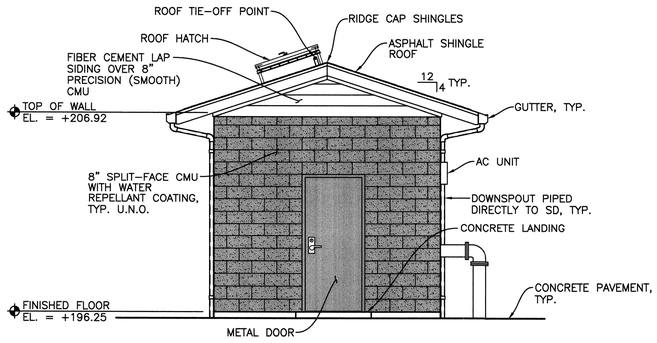

EAST ELEVATION
1/4" = 1'-0"

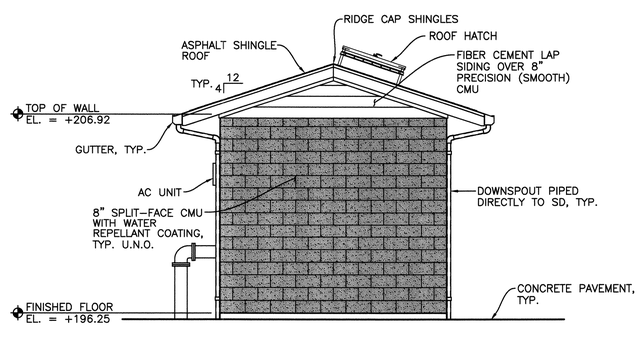

WEST ELEVATION
1/4" = 1'-0"

REGISTERED PROFESSIONAL ENGINEER
JEFFREY A. FINN
43928
Exp. 6/30/19
CIVIL & STRUCTURAL
STATE OF CALIFORNIA
7/21/17

City of Santa Rosa
Transportation & Public Works

NO.	DATE	REVISION	BY

DATE: JULY 21, 2017
CHK BY: TEE
SCALE: AS SHOWN
DWN BY: REM
APPROVED: Acting Deputy Director - Engineering
By Andrew Allen Date 8/1/17

CITY OF SANTA ROSA
FARMERS LANE WELL FACILITIES
REHABILITATION

WELL 4-1 ELEVATIONS

CONTRACT NO. C01839
SHEET 10 OF 40
FILE NO. 2017-0014

WELL REHABILITATION

Finn Design Group, Inc.
Structural Engineers
5000 Hopyard Road, Suite 300
Pleasanton, CA 94588
OFFICE (925) 737-1600
FAX (925) 737-1601

M:\1drawings\16-dwgs\16-160.1 Farmers Lane Well Buildings\16-1601A1.dwg 7/11/2017 4:26 PM rmoe

SHEET NOTES:

1. SEE PROJECT SPECIFICATIONS FOR DOOR REQUIREMENTS AND SHEET 13 FOR DOOR DETAILS & DOOR SCHEDULE.

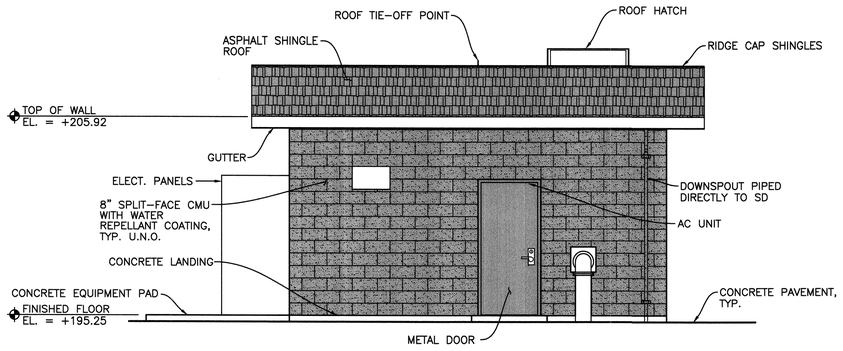

NORTH ELEVATION
1/4" = 1'-0"

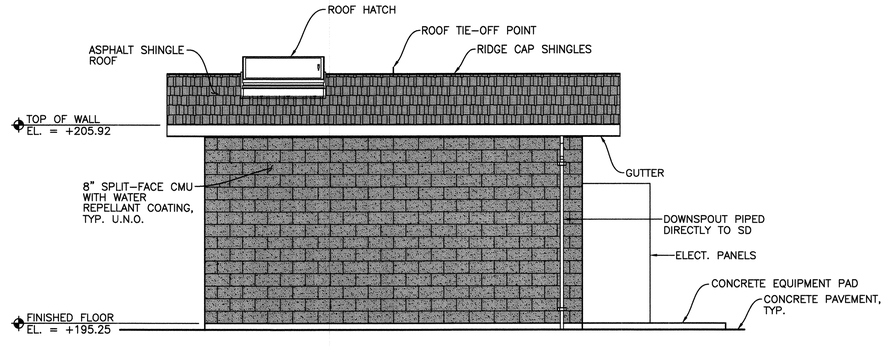

SOUTH ELEVATION
1/4" = 1'-0"

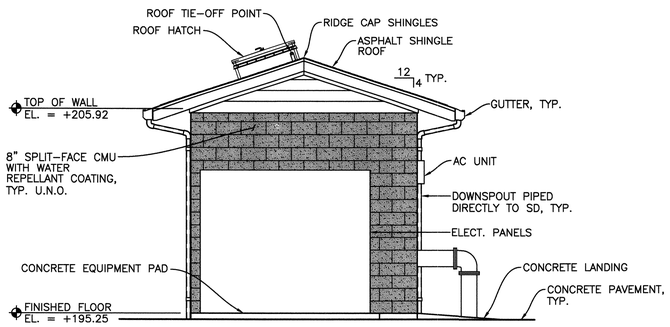

EAST ELEVATION
1/4" = 1'-0"

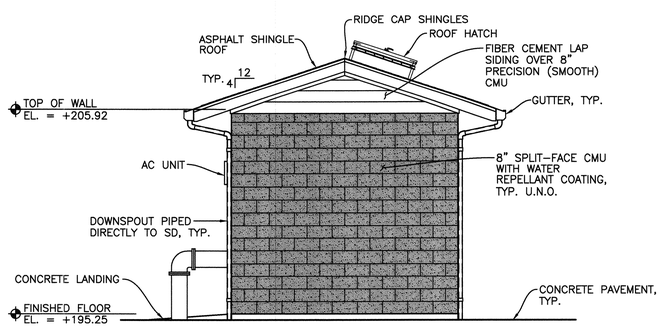

WEST ELEVATION
1/4" = 1'-0"

REGISTERED PROFESSIONAL ENGINEER
JEFFREY A. FINN
43928
Exp. 6/30/19
CIVIL & STRUCTURAL
STATE OF CALIFORNIA
7/21/17

City of Santa Rosa
Transportation & Public Works

NO.	DATE	REVISION	BY

SCALE: AS SHOWN
DWN BY: REM
DATE: JULY 21, 2017
CHK BY: TEE

APPROVED: *Acting Deputy Director – Engineering*
By Andrew Allen Date 8/1/17

CITY OF SANTA ROSA
FARMERS LANE WELL FACILITIES
REHABILITATION

WELL 4-2 ELEVATIONS

CONTRACT NO. C01839
SHEET 11 OF 40
FILE NO. 2017-0014

WELL REHABILITATION

Finn Design Group, Inc.
Structural Engineers
5000 Hopyard Road, Suite 300
Pleasanton, CA 94588
OFFICE (925) 737-1600
FAX (925) 737-1601

M:\1drawings\16-dwgs\16-160.1 Farmers Lane Well Buildings\16-1601A2.dwg 7/20/2017 9:04 AM rmoe

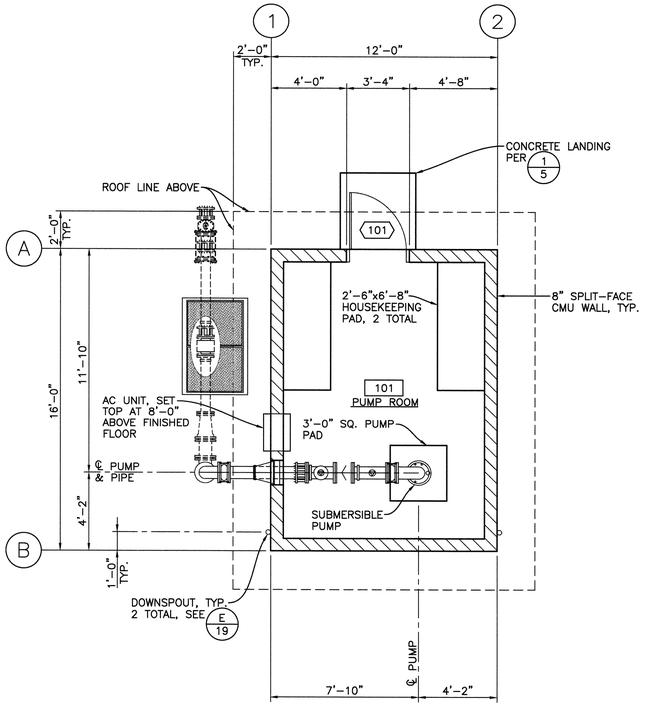

WELL 4-1 FLOOR PLAN
1/4" = 1'-0"

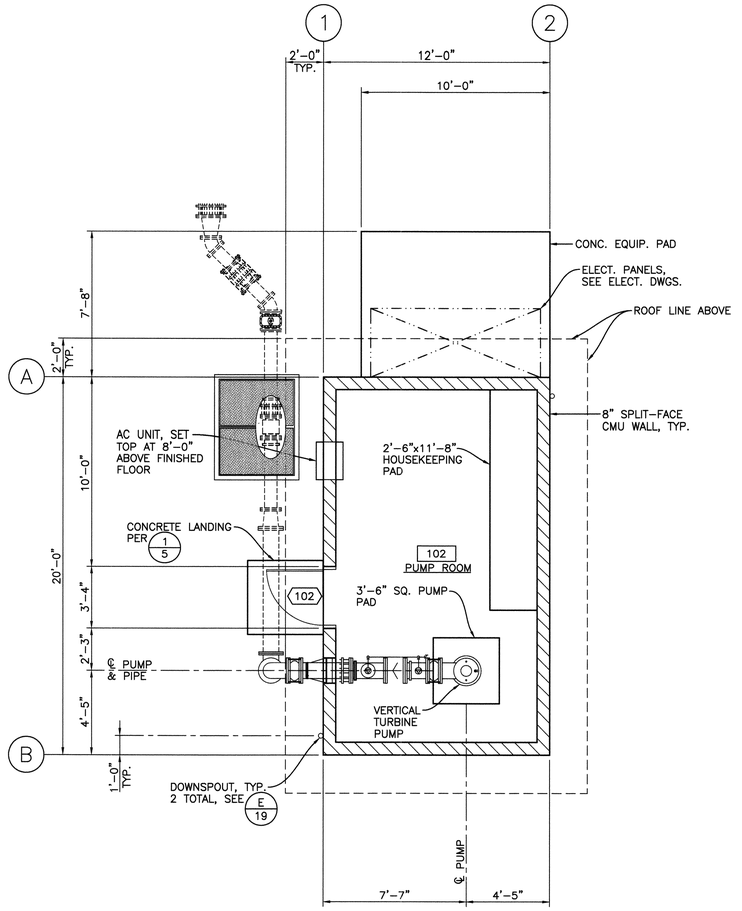

WELL 4-2 FLOOR PLAN
1/4" = 1'-0"

FLOOR PLAN NOTES:

1. SEE GENERAL NOTES & SPECIFICATIONS ON SHEET 14.
2. ALL DIMENSIONS ARE TO NOMINAL FACE OF MASONRY BLOCK OR TO FACE OF CONCRETE, U.N.O.
3. DENOTES MASONRY BLOCK WALL
4. DENOTES DIRECTION OF CONCRETE SLAB SLOPE. SEE FOUNDATION PLAN ON SHEET 17 FOR TOP OF SLAB ELEVATIONS.
5. SEE SHEET 13 FOR ARCHITECTURAL FINISH SCHEDULE SHOWING INTERIOR FINISH REQUIREMENTS.
6. 101 ROOM NUMBER, SEE FINISH SCHEDULE ON SHEET 13.
7. 101 DOOR NUMBER, SEE DOOR SCHEDULE ON SHEET 13.

WELL 4-1 BUILDING CODE ANALYSIS[1]	
ITEM	VALUE
DESCRIPTION OF USE	POTABLE WATER PUMP STATION
OCCUPANCY GROUP	F-2
CONSTRUCTION TYPE	VB
SEPARATION	NO SEPARATION REQUIREMENT
NUMBER OF STORIES	1
ALLOWABLE NUMBER OF STORIES	2
BUILDING HEIGHT	14 FT.
ALLOWABLE BUILDING HEIGHT	40 FT.
BUILDING AREA	192 FT.^{2}
ALLOWABLE BUILDING AREA	13,000 FT^2
AUTOMATIC SPRINKLER SYSTEM	NOT REQUIRED[2]

WELL 4-2 BUILDING CODE ANALYSIS[1]	
ITEM	VALUE
DESCRIPTION OF USE	POTABLE WATER PUMP STATION
OCCUPANCY GROUP	F-2
CONSTRUCTION TYPE	VB
SEPARATION	NO SEPARATION REQUIREMENT
NUMBER OF STORIES	1
ALLOWABLE NUMBER OF STORIES	2
BUILDING HEIGHT	14 FT.
ALLOWABLE BUILDING HEIGHT	40 FT.
BUILDING AREA	240 FT.^{2}
ALLOWABLE BUILDING AREA	13,000 FT^2
AUTOMATIC SPRINKLER SYSTEM	NOT REQUIRED[2]

NOTES:
1. CODE BASIS: 2016 CALIFORNIA BUILDING CODE (CBC).
2. AUTOMATIC FIRE SPRINKLERS ARE NOT REQUIRED PER CBC SECTION 903.2.4.

REGISTERED PROFESSIONAL ENGINEER JEFFREY A. FINN 43928 Exp. 6/30/19 CIVIL & STRUCTURAL STATE OF CALIFORNIA 7/21/17

City of Santa Rosa Transportation & Public Works

NO.	DATE	REVISION	BY

SCALE: AS SHOWN
DATE: JULY 21, 2017
DWN BY: REM
CHK BY: TEE

APPROVED: Acting Deputy Director – Engineering
By Andrew Allen Date 8/1/17

CITY OF SANTA ROSA
FARMERS LANE WELL FACILITIES
REHABILITATION

WELL 4-1 & 4-2 FLOOR PLANS

CONTRACT NO. C01839
SHEET 12 OF 40
FILE NO. 2017-0014

WELL REHABILITATION

Finn Design Group, Inc.
Structural Engineers
5000 Hopyard Road, Suite 300
Pleasanton, CA 94588
OFFICE (925) 737-1600
FAX (925) 737-1601

M:\1drawings\16-dwgs\16-160.1 Farmers Lane Well Buildings\16-1601A3.dwg 7/20/2017 8:48 AM rmoe

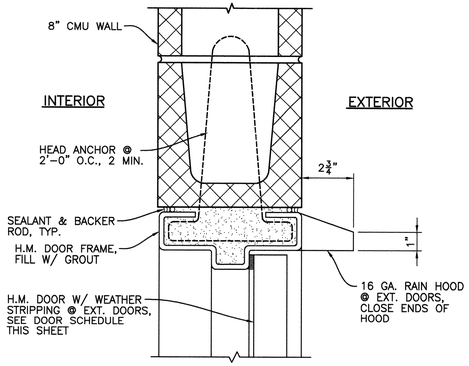

HOLLOW METAL DOOR HEAD

DETAIL 1/13 — 3" = 1'-0"

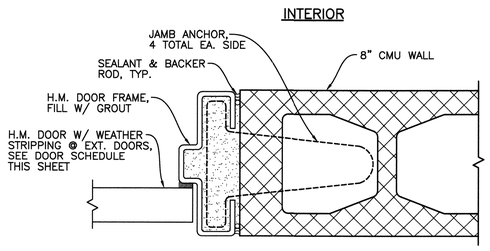

HOLLOW METAL DOOR JAMB

DETAIL 2/13 — 3" = 1'-0"

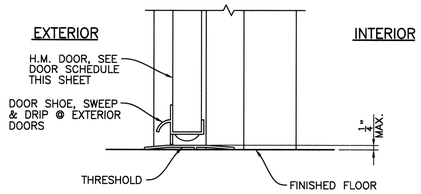

HOLLOW METAL DOOR SILL

DETAIL 3/13 — 3" = 1'-0"

ARCHITECTURAL FINISH SCHEDULE

SPACE		FLOOR			WALLS			CEILING			
NO.	ROOM	MATERIAL	FINISH	COATING	MATERIAL	FINISH	COLOR	HEIGHT	MATERIAL	FINISH	COLOR
4–1	PUMP ROOM	CONCRETE	STEEL TROWEL	EPOXY SEALER (1)	MASONRY	PAINT	OFF WHITE	10'–11"	NONE	N/A	N/A
4–2	PUMP ROOM	CONCRETE	STEEL TROWEL	EPOXY SEALER (1)	MASONRY	PAINT	OFF WHITE	10'–11"	NONE	N/A	N/A

FINISH NOTES:
1. EPOXY SEALER PER PROJECT SPECIFICATIONS.

DOOR SCHEDULE

DOOR						FRAME		
DR. NO.	ROOM	TYPE	MTL.	SIZE	DOOR HARDWARE TYPE (1)	MTL.	SIZE	REMARKS
4–1	PUMP ROOM	(A)	H.M.	3'–0"x7'–2"	A	H.M.	2"x6"	NONE
4–2	PUMP ROOM	(A)	H.M.	3'–0"x7'–2"	A	H.M.	2"x6"	NONE

DOOR NOTES:
1. DOOR HARDWARE TYPE PER PROJECT SPECIFICATIONS.

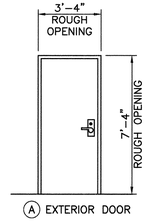

(A) EXTERIOR DOOR

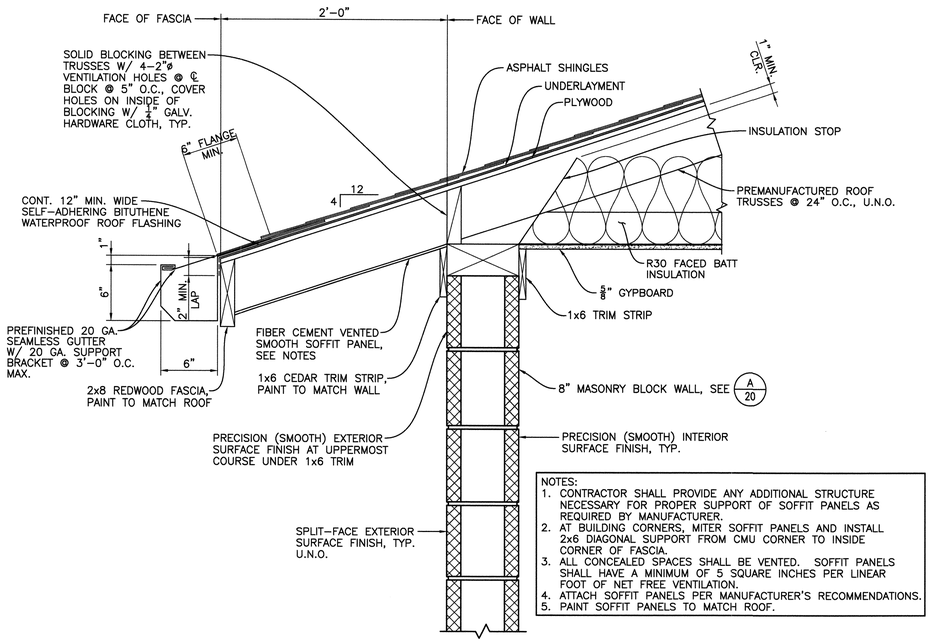

NOTES:
1. CONTRACTOR SHALL PROVIDE ANY ADDITIONAL STRUCTURE NECESSARY FOR PROPER SUPPORT OF SOFFIT PANELS AS REQUIRED BY MANUFACTURER.
2. AT BUILDING CORNERS, MITER SOFFIT PANELS AND INSTALL 2x6 DIAGONAL SUPPORT FROM CMU CORNER TO INSIDE CORNER OF FASCIA.
3. ALL CONCEALED SPACES SHALL BE VENTED. SOFFIT PANELS SHALL HAVE A MINIMUM OF 5 SQUARE INCHES PER LINEAR FOOT OF NET FREE VENTILATION.
4. ATTACH SOFFIT PANELS PER MANUFACTURER'S RECOMMENDATIONS.
5. PAINT SOFFIT PANELS TO MATCH ROOF.

ROOF EAVE DETAIL

DETAIL 4/13 — 1 1/2" = 1'-0"

NOTES:
1. ATTACH LAP SIDING PER MANUFACTURER'S RECOMMENDATIONS.
2. PAINT LAP SIDING TO MATCH WALL.

ROOF RAKE DETAIL

DETAIL 5/13 — 1 1/2" = 1'-0"

REGISTERED PROFESSIONAL ENGINEER JEFFREY A. FINN 43928 Exp. 6/30/19 CIVIL & STRUCTURAL STATE OF CALIFORNIA 7/21/17

City of Santa Rosa
Transportation & Public Works

NO.	DATE	REVISION	BY

SCALE: AS SHOWN
DWN BY: RCM
DATE: JULY 21, 2017
CHK BY: TEE

APPROVED: Acting Deputy Director – Engineering
By Andrew Allen Date 9/11/17

CITY OF SANTA ROSA
FARMERS LANE WELL FACILITIES REHABILITATION

ARCHITECTURAL DETAILS & SCHEDULES

CONTRACT NO. C01839
SHEET 13 OF 40
FILE NO. 2017–0014

WELL REHABILITATION

Finn Design Group, Inc.
Structural Engineers
5000 Hopyard Road, Suite 300
Pleasanton, CA 94588
OFFICE (925) 737–1600
FAX (925) 737–1601

M:\1drawings\16-dwgs\16-160.1 Farmers Lane Well Buildings\16-1601A4.dwg 7/11/2017 4:25 PM rmoe

GENERAL

1. BASIS OF DESIGN: 2016 CALIFORNIA BUILDING CODE.
2. THESE DRAWINGS SHALL BE USED IN CONJUCTION WITH THE SEPARATELY BOUND PROJECT SPECIFICATIONS.
3. ALL MATERIALS, WORKMANSHIP, TESTING AND INSPECTION SHALL CONFORM TO THE CALIFORNIA BUILDING CODE, 2016 EDITION, AND LOCAL BUILDING CODES.
4. THE CONTRACTOR SHALL VERIFY ALL DIMENSIONS AND EXISTING CONDITIONS ON THE JOBSITE WITH A COMPLETE SET OF THE LATEST DRAWINGS. OMISSIONS OR DISCREPANCIES BETWEEN THE VARIOUS ELEMENTS OF THE CONTRACT DOCUMENTS SHALL BE BROUGHT TO THE ATTENTION OF THE ENGINEER BEFORE PROCEEDING WITH WORK.
5. DETAILS SHOWN ARE TYPICAL, AND APPLY TO SIMILAR CONDITIONS, UNLESS NOTED OTHERWISE.
6. THE CONTRACTOR SHALL BE RESPONSIBLE FOR JOBSITE SAFETY, INCLUDING SAFETY OF THE BUILDING AND ALL EXISTING UTILITIES. THE CONTRACTOR SHALL PROVIDE ADEQUATE SHORING, BRACING, AND GUYS IN ACCORDANCE WITH ALL NATIONAL, STATE AND LOCAL ORDINANCES.
7. DRAWINGS SHALL NOT BE SCALED OR MEASURED FOR DIMENSIONS.
8. SPECIAL INSPECTION SHALL BE PROVIDED AS REQUIRED BY THE STATEMENT OF SPECIAL INSPECTIONS ON SHEET 15.

FOUNDATION

1. FOUNDATION DESIGN IS BASED ON GEOTECHNICAL INVESTIGATION REPORT PREPARED BY RGH CONSULTANTS, DATED JANUARY 17, 2017, PROJECT NO. 5383.07.04.1.
2. FOOTING DESIGN CAPACITIES:
   DEAD + LIVE LOAD BEARING PRESSURE: 2,250 PSF
   DEAD + WIND / SEISMIC BEARING PRESSURE: 3,000 PSF
3. SIDES OF FOOTINGS SHOWN STRAIGHT ARE FORMED. IF SITE CONDITION ALLOWS AND GEOTECHNICAL ENGINEER CONCURS, SIDES OF FOOTINGS MAY BE FORMED OR NOT FORMED AT CONTRACTOR'S OPTION. FOOTINGS CAST DIRECTLY AGAINST EARTH REQUIRE THE FOLLOWING PRECAUTIONS; A) SLOPE SIDES OF EXCAVATIONS AS APPROVED BY THE GEOTECHNICAL ENGINEER, B) CLEAN UP OF SLOUGHING BEFORE, DURING AND AFTER PLACING CONCRETE, C) ADEQUATE COVER MUST BE PROVIDED FOR ALL REBAR. ADD 1" TO ALL SIDES OF FOOTING DIMENSIONS WHICH ARE CAST AGAINST EARTH.

CONCRETE

1. ALL CONCRETE SHALL BE MIXED AND PLACED IN ACCORDANCE WITH ACI 318-14. USE MIXES WITH MAXIMUM AGGREGATE SIZE APPROPRIATE FOR FORM REBAR CLEARANCES TO BE ENCOUNTERED (SEE A.C.I.)
2. THE PROPOSED MATERIALS AND MIX DESIGN SHALL BE FULLY DOCUMENTED BY THE CONTRACTOR AND REVIEWED BY THE CITY'S TESTING LABORATORY. IT IS THE CONTRACTOR'S RESPONSIBILITY TO OBTAIN THE REQUIRED DESIGN STRENGTH. SUBMITTAL DATA FROM 30 PREVIOUS COMPRESSION TESTS ON EACH PROPOSED MIX WILL BE REQUIRED FOR REVIEW BEFORE MIX CAN BE APPROVED.
3. ALL CONCRETE SHALL HAVE THE FOLLOWING MINIMUM 28-DAY STRENGTHS, U.N.O.
   STRUCTURE FOOTINGS, SLABS, AND WALLS 4,000 PSI
   MISCELLANEOUS SITE CONCRETE 3,000 PSI
4. SCHEDULING OF WORK MAY REQUIRE DESIGN STRENGTH TO BE ACHIEVED IN LESS THAN 28 DAYS. CONTRACTOR SHALL COORDINATE MIX DESIGN AND CONCRETE CYLINDER BREAKS WITH THE CITY'S TESTING LABORATORY.
5. CONSTRUCTION JOINTS SHALL BE INTENTIONALLY ROUGHENED BY SAND BLASTING OR MECHANICAL MEANS AND CLEANED BEFORE NEW POUR. LOCATIONS SHALL BE AS SHOWN OR APPROVED IN WRITING BY THE STRUCTURAL ENGINEER.
6. BACKFILLING OF BELOW-GRADE WALLS SHALL NOT BEGIN UNTIL THE CONCRETE HAS REACHED ITS REQUIRED DESIGN STRENGTH.

CONCRETE UNIT MASONRY

1. ALL CONCRETE UNIT MASONRY SHALL BE LIGHTWEIGHT AND SHALL BE GROUTED SOLID.
2. MASONRY UNIT DESIGN STRENGTH f'm = 1,500 PSI.
3. THE PROPOSED MATERIALS AND GROUT AND MORTAR MIX DESIGNS SHALL BE FULLY DOCUMENTED BY THE CONTRACTOR AND REVIEWED BY THE CITY'S TESTING LABORATORY. IT IS THE CONTRACTOR'S RESPONSIBILITY TO OBTAIN THE REQUIRED STRENGTH.
4. VERIFICATION OF f'm SHALL BE BY MEANS OF THE UNIT STRENGTH METHOD AS OUTLINED IN CBC SECTION 2105.2.2.1.

REINFORCING STEEL

1. REINFORCING STEEL SHALL BE ASTM A615, GRADE 60 DEFORMED BARS, U.N.O. REINFORCING STEEL TO BE WELDED SHALL BE ASTM A706.
2. ALL REINFORCING STEEL AND EMBEDMENTS TO BE HELD SECURELY IN PLACE PRIOR TO PLACING CONCRETE. PROVIDE SUFFICIENT SUPPORTS TO ALLOW WALKING ON REINFORCEMENT.
3. WELDING OF REINFORCING IS PROHIBITED UNLESS EXPLICITLY SHOWN ON THE DRAWINGS OR APPROVED IN WRITING BY THE STRUCTURAL ENGINEER.
4. PROVIDE CONTINUOUS REINFORCEMENT WHEREVER POSSIBLE, PLACE ONLY AS SHOWN OR APPROVED, STAGGER SPLICES WHERE POSSIBLE.

DEFERRED SUBMITTALS/SHOP DRAWINGS

THE FOLLOWING ITEMS SHALL BE SUBMITTED TO THE ENGINEER FOR REVIEW:
1. CONCRETE MIX DESIGNS.
2. UNIT MASONRY SHOP DRAWINGS, GROUT MIX DESIGNS AND CERTIFICATIONS OF COMPLIANCE.
3. BAR REINFORCING STEEL SHOP DRAWINGS.
4. STRUCTURAL STEEL & MISCELLANEOUS METAL SHOP DRAWINGS.
5. WELDING PROCEDURE SPECIFICATIONS, WELDING ELECTRODE DATA, & WELDER QUALIFICATIONS.
6. PREFABRICATED WOOD ROOF TRUSS SHOP DRAWINGS.
7. ANCHORAGE OF PUMPS AND ELECTRICAL/CONTROL EQUIPMENT.

STRUCTURAL DESIGN PARAMETERS

DESIGN DEAD LOADS:
   A. ROOF LOAD 15 PSF

DESIGN LIVE LOADS:
   A. ROOF LOAD 20 PSF

DESIGN WIND LOADS – MAIN WIND FORCE RESISTING SYSTEM (MWFRS):
   BASIC WIND SPEED 115 MPH
   EXPOSURE CATEGORY C

DESIGN EARTHQUAKE LOADS:
   SITE CLASS D
   SEISMIC IMPORTANCE FACTOR, I 1.50
   MAPPED SPECTRAL RESPONSE ACCELERATIONS:
      S_S 2.481g
      S_1 1.026g
   SPECTRAL RESPONSE COEFFICIENTS:
      S_{DS} 1.654g
      S_{D1} 1.026g
   SEISMIC DESIGN CATEGORY, SDC F
   BASIC SEISMIC FORCE RESISTING SYSTEM:
      SPECIAL REINFORCED MASONRY SHEARWALLS
   RESPONSE MODIFICATION FACTOR, R 5.00
   SEISMIC RESPONSE COEFFICIENT/DESIGN BASE SHEAR 0.496W (STRENGTH LEVEL)

ABBREVIATIONS

&	AND	GMU	GLASS MASONRY UNIT
@	AT	HDR.	HEADER
ø	DIAMETER	HGRS.	HANGERS
#	NUMBER	H.S.B.	HIGH STRENGTH BOLTS
A.B.	ANCHOR BOLT	H.M.	HOLLOW METAL
ARCH.	ARCHITECT	HORIZ.	HORIZONTAL
BM.	BEAM	HT.	HEIGHT
BRG.	BEARING	INT.	INTERIOR
BLKG.	BLOCKING	JST.	JOIST
BOTT.	BOTTOM	LDGR.	LEDGER
BNDY.	BOUNDARY	LL	LIVE LOAD
CAM	CAMBER UP	LLH	LONG LEG HORIZONTAL
C.J.	CEILING JOIST	LLV	LONG LEG VERTICAL
CLG.	CEILING	MAX.	MAXIMUM
℄	CENTERLINE	M.B.	MACHINE BOLTS
CLR.	CLEAR	MECH.	MECHANICAL
COL.	COLUMN	MIN.	MINIMUM
CJP	COMPLETE JOINT PENETRATION	N/A	NOT APPLICABLE
		NTS	NOT TO SCALE
CONN.	CONNECTION	O.C.	ON CENTER
CONC.	CONCRETE	O.H.	OPPOSITE HAND
CONST.	CONSTRUCTION	PJP	PARTIAL JOINT PENETRATION
CMU	CONCRETE MASONRY UNIT		
CONT.	CONTINUOUS	ℙ	PLATE
DBL.	DOUBLE	REINF.	REINFORCEMENT
DP.	DEEP	R.R.	ROOF RAFTER
EA.	EACH	S.A.D.	SEE ARCHITECTURAL DRAWINGS
E.N.	EDGE NAILING	SHT.	SHEET
ELEC.	ELECTRICAL	S.M.S.	SHEET METAL SCREW
EL.	ELEVATION	SHTG.	SHEATHING
ELEV.	ELEVATION	SIM.	SIMILAR
EMBED.	EMBEDMENT	S.O.G.	SLAB ON GRADE
EQ.	EQUAL	SPECS.	SPECIFICATIONS
EXT.	EXTERIOR	SQ.	SQUARE
FLR.	FLOOR	STD.	STANDARD
FDN.	FOUNDATION	THK.	THICK
FRP	FIBERGLASS REINFORCED PLASTIC	THD.	THREADED
		T.O.C.	TOP OF CONCRETE
FTG.	FOOTING	T.O.S.	TOP OF STEEL
F.H.	FULL HEIGHT	T&B	TOP & BOTTOM
F.J.	FLOOR JOIST	TYP.	TYPICAL
GA.	GAGE	U.N.O.	UNLESS NOTED OTHERWISE
GALV.	GALVANIZED	VERT.	VERTICAL
G.S.M.	GALVANIZED SHEET METAL	W/	WITH

REGISTERED PROFESSIONAL ENGINEER JEFFREY A. FINN 43928 5672 CIVIL & STRUCTURAL Exp. 6/30/19 STATE OF CALIFORNIA 7/21/17

City of Santa Rosa Transportation & Public Works

NO.	DATE	REVISION	BY

DATE: JULY 21, 2017
CHK BY: TEE
SCALE: AS SHOWN
DWN BY: REM

APPROVED: Acting Deputy Director – Engineering
By _____ Date 8/1/17
Andrew Allen

CITY OF SANTA ROSA
FARMERS LANE WELL FACILITIES
REHABILITATION

GENERAL NOTES & SPECIFICATIONS

CONTRACT NO. C01839
SHEET 14 OF 40
FILE NO. 2017-0014

Finn Design Group, Inc.
Structural Engineers
5000 Hopyard Road, Suite 300
Pleasanton, CA 94588
OFFICE (925) 737-1600
FAX (925) 737-1601

WELL REHABILITATION

M:\1drawings\16-dwgs\16-160.1 Farmers Lane Well Buildings\16-1601S1.dwg 7/11/2017 4:24 PM rmoe

STATEMENT OF SPECIAL INSPECTIONS

SPECIAL INSPECTION
- INSPECTION OF THE MATERIALS, INSTALLATION, FABRICATION, ERECTION OR PLACEMENT OF COMPONENTS AND CONNECTIONS REQUIRING SPECIAL EXPERTISE TO ENSURE COMPLIANCE WITH THE APPROVED CONSTRUCTION DOCUMENTS AND THE 2016 CALIFORNIA BUILDING CODE (CBC). THIS IS IN ADDITION TO THOSE REQUIRED BY SECTION 110, CHAPTER 1 OF THE 2016 CBC.

SPECIAL INSPECTOR
- THE SPECIAL INSPECTOR SHALL BE A QUALIFIED PERSON WHO SHALL DEMONSTRATE COMPETENCE, TO THE SATISFACTION OF THE BUILDING OFFICIAL, FOR INSPECTION OF THE PARTICULAR TYPE OF CONSTRUCTION OR OPERATION REQUIRING SPECIAL INSPECTION.

DUTIES AND RESPONSIBILITIES OF THE SPECIAL INSPECTOR
- THE SPECIAL INSPECTOR SHALL INSPECT THE WORK ASSIGNED FOR CONFORMANCE WITH THE APPROVED DESIGN DRAWINGS AND SPECIFICATIONS.
- SPECIAL INSPECTORS SHALL KEEP RECORDS OF ALL INSPECTIONS. THE SPECIAL INSPECTOR SHALL FURNISH INSPECTION REPORTS TO THE BUILDING OFFICIAL, THE ENGINEER OR ARCHITECT OF RECORD, AND OTHER DESIGNATED PERSONS. REPORTS SHALL INDICATE THAT WORK INSPECTED WAS DONE IN CONFORMANCE TO APPROVED CONSTRUCTION DOCUMENTS. DISCREPANCIES SHALL BE BROUGHT TO THE IMMEDIATE ATTENTION OF THE CONTRACTOR FOR CORRECTION, THEN IF UNCORRECTED, TO THE ATTENTION OF THE BUILDING OFFICIAL AND ENGINEER OR ARCHITECT OF RECORD.
- THE SPECIAL INSPECTOR SHALL SUBMIT A FINAL SIGNED REPORT STATING WHETHER THE WORK REQUIRING SPECIAL INSPECTION WAS, TO THE BEST OF THE INSPECTOR'S KNOWLEDGE, IN CONFORMANCE WITH THE APPROVED PLANS AND SPECIFICATIONS AND THE APPLICABLE WORKMANSHIP PROVISIONS OF THE CODE.

CONTRACTOR STATEMENT OF RESPONSIBILITY
- PRIOR TO COMMENCEMENT OF WORK, THE CONTRACTOR SHALL SUBMIT A WRITTEN STATEMENT OF RESPONSIBILITY TO THE BUILDING OFFICIAL AND THE OWNER IN CONFORMANCE WITH SECTION 1704.4 OF THE 2016 CBC.

REQUIRED SPECIAL INSPECTIONS
- ITEMS REQUIRING SPECIAL INSPECTION SHALL BE AS FOLLOWS:

REQUIRED SPECIAL INSPECTIONS AND TESTS OF STRUCTURAL MASONRY (LEVEL C)

TYPE	FREQUENCY OF INSPECTION		REFERENCE FOR CRITERIA	
	CONTINUOUS SPECIAL INSPECTION[1]	PERIODIC SPECIAL INSPECTION[1]	TMS 402/ ACI 530/ ASCE 5[2]	TMS 602/ ACI 530.1/ ASCE 6[2]
1. Verify compliance with the approved submittals	–	X	–	Art. 1.5
2. Verify that the following are in compliance:				
a. Proportions of site–mixed mortar, grout and prestressing grout for bonded tendons	–	X	–	Art. 2.1, 2.6A 2.6B, 2.6C, 2.4G.1.b
b. Grade, type, and size of reinforcement and anchor bolts, and prestressing tendons and anchorages	–	X	Sec. 6.1	Art. 2.4, 3.4
c. Placement of masonry units and construction of mortar joints	–	X	–	Art. 3.3B
d. Placement of reinforcement, connectors, and prestressing tendons and anchorages	X	–	Sec. 6.1, 6.2.1, 6.2.6, 6.2.7	Art. 3.2E, 3.4, 3.6A
e. Grout space prior to grouting	X	–	–	Art. 3.2D, 3.2F
f. Placement of grout and prestressing grout for bonded tendons	X	–	–	Art. 3.5, 3.6C
g. Size and location of structural elements	–	X	–	Art. 3.3F
h. Type, size, and location of anchors, including other details of anchorage of masonry to structural members, frames, or other construction	X	–	Sec. 1.2.1(e), 6.1.4.3, 6.2.1	–
i. Welding of reinforcement	X	–	Sec. 8.1.6.7.2, 9.3.3.4(c), 11.3.3.4(b)	–
j. Preparation, construction, and protection of masonry during cold weather (temperature below 40°F (4.4°C)) or hot weather (temperature above 90°F (32.2°))	–	X	–	Art. 1.8C, 1.8D
k. Application and measurement of prestressing force.	X	–	–	Art. 3.6B
l. Placement of AAC masonry units and construction of thin–bed mortar joints	X	–	–	Art. 3.3B.9, 3.3F.1.b
m. Properties of thin–bed mortar for AAC masonry	X	–	–	Art. 2.1C.1
3. Observe preparation of grout specimens, mortar specimens, and/or prisms	X	–	–	Art. 1.4B.2.a.3, 1.4B.2.b.3, 1.4B.2.c.3, 1.4B.3, 1.4B.4

1. Refer to CBC Section 202 for definition of continuous and periodic inspections.
2. The specific standards referenced are those listed in CBC Chapter 35.

REQUIRED SPECIAL INSPECTIONS AND TESTS OF CONCRETE CONSTRUCTION

TYPE	CONTINUOUS SPECIAL INSPECTION[1]	PERIODIC SPECIAL INSPECTION[1]	REFERENCED STANDARD[2]	CBC SECTION
1. Inspect reinforcement, including prestressing tendons, and verify placement.	–	X	ACI 318: 20, 25.2, 25.3, 26.5.1–26.5.3	1908.4
2. Reinforcing bar welding:				
a. Verify weldability of reinforcing bars other than ASTM A706;	–	X	AWS D1.4 ACI 318: 26.5.4	–
b. Inspect single–pass fillet welds, maximum $\frac{5}{16}$"; and	–	X		
c. Inspect all other welds.	X	–		
3. Inspect anchors cast in concrete.	–	X	ACI 318: 17.8.2	–
4. Inspect anchors post–installed in hardened concrete members.[3]				
a. Adhesive anchors installed in horizontally or upwardly inclined orientations to resist sustained tension loads	X	–	ACI 318: 17.8.2.4	–
b. Mechanical anchors and adhesive anchors not defined in 4.a.	–	X	ACI 318: 17.8.2	
5. Verify use of required design mix.	–	X	ACI 318: 19, 26.4.3, 26.4.4	1904.1, 1904.2, 1908.2, 1908.3
6. Prior to concrete placement, fabricate specimens for strength tests, perform slump and air content tests, and determine the temperature of the concrete.	X	–	ASTM C172 ASTM C31 ACI 318: 26.4.5, 26.12	1908.10
7. Inspect concrete and shotcrete placement for proper application techniques.	X	–	ACI 318: 26.4.5	1908.6, 1908.7, 1908.8
8. Verify maintenance of specified curing temperature and techniques.	–	X	ACI 318: 26.4.7–26.4.9	1908.9
9. Inspect prestressed concrete for:				
a. Application of prestressing forces; and	X	–	ACI 318: 26.9.2.1	–
b. Grouting of bonded prestressing tendons.	X	–	ACI 318: 26.9.2.3	
10. Inspect erection of precast concrete members.	–	X	ACI 318: 26.8	–
11. Verify in–situ concrete strength, prior to stressing of tendons in post–tensioned concrete and prior to removal of shores and forms from beams and structural slabs.	–	X	ACI 318: 26.10.2	–
12. Inspect formwork for shape, location and dimensions of the concrete member being formed.	–	X	ACI 318: 26.10.1(b)	–

1. Refer to CBC Section 202 for definition of continuous and periodic inspections.
2. Where applicable, see also CBC Section 1705.12, Special inspections for seismic resistance.
3. Specific requirements for special inspection shall be included in the research report for the anchor issued by an approved source in accordance with 17.8.2 in ACI 318, or other qualification procedures. Where specific requirements are not provided, special inspection requirements shall be specified by the registered design professional and shall be approved by the building official prior to the commencement of the work.

REQUIRED SPECIAL INSPECTIONS AND TESTS OF SOILS

TYPE	CONTINUOUS SPECIAL INSPECTION[1]	PERIODIC SPECIAL INSPECTION[1]
1. Verify materials below shallow foundations are adequate to achieve the design bearing capacity.	–	X
2. Verify excavations are extended to proper depth and have reached proper material.	–	X
3. Perform classification and testing of compacted fill materials.	–	X
4. Verify use of proper materials, densities and lift thicknesses during placement and compaction of compacted fill.	X	–
5. Prior to placement of compacted fill, inspect subgrade and verify that site has been prepared properly.	–	X

1. Refer to CBC Section 202 for definition of continuous and periodic inspections.

REQUIRED SPECIAL INSPECTIONS AND TESTS OF POST–INSTALLED CONCRETE ANCHORS

TYPE	CONTINUOUS SPECIAL INSPECTION[1]	PERIODIC SPECIAL INSPECTION[1]	PRODUCT NAME AND EVALUATION REPORT REFERENCE
EXPANSION ANCHORS			
1. During anchor installation, verify the following:			Simpson Strong–Bolt 2 ICC ESR–3037 or Hilti Kwik Bolt TZ ICC ESR–1917
a. Anchor type	–	X	
b. Anchor dimensions	–	X	
c. Hole cleanliness/cleaning procedures	–	X	
d. Concrete type/compressive strength/thickness	–	X	
e. Drill bit diameter	–	X	
f. Anchor embedment depth	–	X	
g. Edge/End distance(s)/Anchor spacing(s)	–	X	
h. Tightening Torque	–	X	
i Compliance with the appropriate Evaluation Report and manufacturer's published installation instructions, as well as the approved construction documents.	–	X	
EPOXY ANCHORS			
1. During the initial installation of a series of anchors of the same type and size, installed by the same construction personnel, verify the following[2]:			Simpson SET–XP ICC ESR–2508 or Hilti HIT–HY 200 ICC ESR–3187
a. Adhesive name, expiration date, proper nozzle	–	X	
b. Anchor material, grade, diameter, length and cleanliness	–	X	
c. Hole cleanliness/cleaning procedures	–	X	
d. Concrete type/compressive strength/thickness	–	X	
e. Drill bit diameter	–	X	
f. Anchor embedment depth	–	X	
g. Edge/End distance(s)/Anchor spacing(s)	–	X	
h. Compliance with the appropriate Evaluation Report and manufacturer's published installation instructions, as well as the approved construction documents.	–	X	

1. Refer to CBC Section 202 for definition of continuous and periodic inspections.
2. Any change in anchor product or personnel performing the installation requires an initial reinspection. For ongoing installations over an extended period, the special inspector must make regular inspections to confirm proper handling and installation of the product.

REQUIRED SPECIAL INSPECTIONS AND TESTS OF POST–INSTALLED MASONRY ANCHORS

TYPE	CONTINUOUS SPECIAL INSPECTION[1]	PERIODIC SPECIAL INSPECTION[1]	PRODUCT NAME AND EVALUATION REPORT REFERENCE
EXPANSION ANCHORS			
1. During anchor installation, verify the following:			Simpson Wedge–All ICC ESR–1396 or Hilti Kwik Bolt 3 ICC ESR–1385
a. Anchor type	X	–	
b. Anchor dimensions	X	–	
c. Hole cleanliness/cleaning procedures	X	–	
d. Grout and mortar compressive strengths	X	–	
e. Masonry unit type/compliance with ASTM C90 prism compressive strength (where required)	X	–	
f. Drill bit diameter	X	–	
g. Anchor embedment depth	X	–	
h. Edge/End distance(s)/Anchor spacing(s)	X	–	
i. Tightening Torque	X	–	
j. Compliance with the appropriate Evaluation Report and manufacturer's published installation instructions, as well as the approved construction documents.	X	–	
EPOXY ANCHORS			
1. During anchor installation, verify the following:			Simpson SET–XP IAPMO UES ER–265 or Hilti HIT–HY 70 ICC ESR–2682
a. Adhesive name, expiration date, proper nozzle	–	X	
b. Anchor material, grade, diameter, length and cleanliness	–	X	
c. Hole cleanliness/cleaning procedures	–	X	
d. Grout and mortar compressive strengths	–	X	
e. Masonry unit type/compliance with ASTM C90 prism compressive strength (where required)	–	X	
f. Drill bit diameter	–	X	
g. Anchor embedment depth	–	X	
h. Edge/End distance(s)/Anchor spacing(s)	–	X	
i Compliance with the appropriate Evaluation Report and manufacturer's published installation instructions, as well as the approved construction documents.	–	X	

1. Refer to CBC Section 202 for definition of continuous and periodic inspections.

REGISTERED PROFESSIONAL ENGINEER JEFFREY A. FINN 43928 Exp. 6/30/19 CIVIL & STRUCTURAL STATE OF CALIFORNIA 7/21/17

City of Santa Rosa Transportation & Public Works

NO.	DATE	REVISION	BY

SCALE: AS SHOWN
DWN BY: REM
DATE: JULY 21, 2017
CHK BY: TEE

APPROVED: Acting Deputy Director – Engineering
By _____ Date 8/1/17
Andrew Allen

Finn Design Group, Inc.
Structural Engineers
5000 Hopyard Road, Suite 300
Pleasanton, CA 94588
OFFICE (925) 737–1600
FAX (925) 737–1601

CITY OF SANTA ROSA
FARMERS LANE WELL FACILITIES REHABILITATION

STATEMENT OF SPECIAL INSPECTIONS

CONTRACT NO. C01839
SHEET 15 OF 40
FILE NO. 2017–0014

WELL REHABILITATION

M:\1drawings\16–dwgs\16–160.1 Farmers Lane Well Buildings\16–1601S2.dwg 7/11/2017 4:24 PM rmoe

NOTES:
1. D = 6d FOR #3 THRU #8
   D = 8d FOR #9 THRU #11
   D = 10d FOR #14 THRU #18
2. ALL BENDS SHALL BE MADE COLD.
3. #14 AND #18 BARS SHALL BE BEND-TESTED AND APPROVED PRIOR TO BENDING.

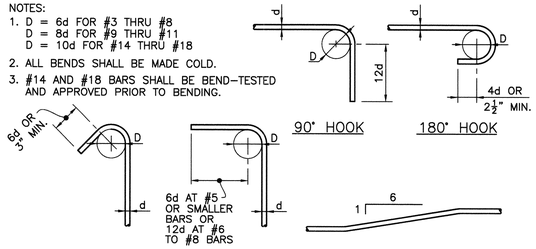

90° HOOK | 180° HOOK | 135° HOOK TIE OR STIRRUP | 90° HOOK TIE OR STIRRUP | MAX. OFFSET REINFORCING

TIE & STIRRUP REINFORCING | PRINCIPLE REINFORCING

DETAIL 1/16 NTS

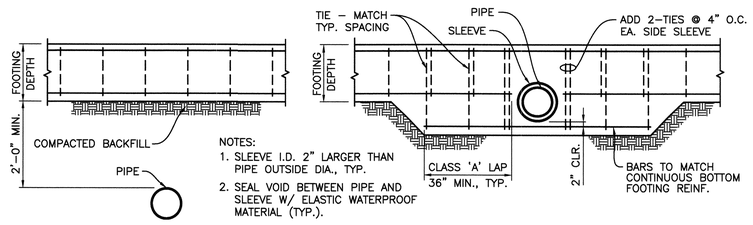

NOTES:
1. SLEEVE I.D. 2" LARGER THAN PIPE OUTSIDE DIA., TYP.
2. SEAL VOID BETWEEN PIPE AND SLEEVE W/ ELASTIC WATERPROOF MATERIAL (TYP.).

BELOW BOTTOM (2'-0" MIN.) | AT BOTTOM REBAR

BELOW BOTTOM (3" MIN.) | BETWEEN TOP AND BOTTOM REINFORCING

HORIZ. PIPE/CONC. FDN. PENETRATION DETAILS

DETAIL 2/16 NTS

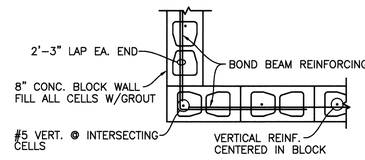

@ CORNERS

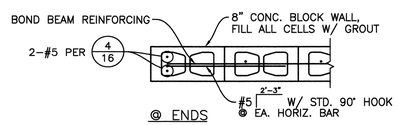

@ ENDS

TYPICAL CMU WALL REINF. DETAILS

DETAIL 3/16 3/4" = 1'-0"

NOTE: CONTRACTOR SHALL PROVIDE ADEQUATE TEMPORARY FALSE WORK TO SUPPORT MASONRY ABOVE OPENINGS. FALSE WORK SHALL REMAIN IN PLACE UNTIL MASONRY HAS ATTAINED DESIGN STRENGTH.

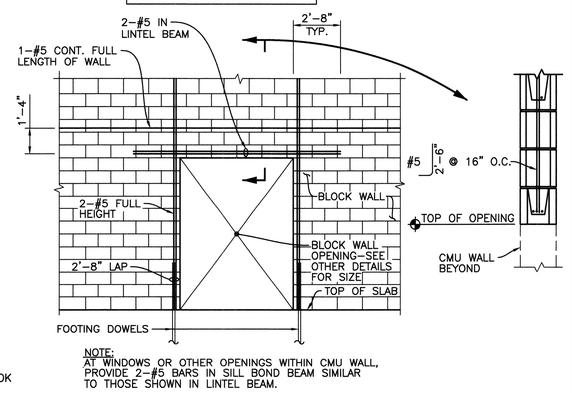

NOTE:
AT WINDOWS OR OTHER OPENINGS WITHIN CMU WALL, PROVIDE 2-#5 BARS IN SILL BOND BEAM SIMILAR TO THOSE SHOWN IN LINTEL BEAM.

TYPICAL REINF. AROUND OPENING IN CMU WALL OVER 16" SQUARE

DETAIL 4/16 NTS

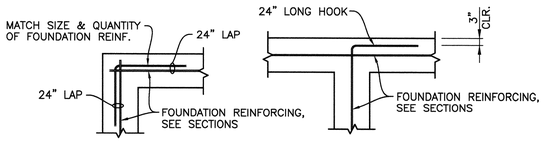

@ CORNERS | @ INTERSECTIONS

TYPICAL CONC. FDN. REINF. DETAILS

DETAIL 5/16 NTS

CONCRETE REINFORCING LAP SPLICES		
CONCRETE STRENGTH	f'_c = 4000 PSI	
BAR SIZE	TOP BARS	OTHER BARS
#3	1'-4"	1'-4"
#4	1'-8"	1'-4"
#5	2'-1"	1'-7"
#6	2'-5"	1'-11"
#7	3'-7"	2'-9"
#8	4'-1"	3'-1"
#9	4'-7"	3'-6"
#10	5'-2"	3'-11"
#11	5'-8"	4'-5"

NOTES:
1. LAP SPLICE LENGTHS SHALL BE INCREASED BY 50% WHERE BAR CLEAR COVER IS LESS THAN 2 BAR DIAMETERS OR WHERE SPACING BETWEEN BARS BEING SPLICED IS LESS THAN 5 BAR DIAMETERS.
2. TOP BARS ARE HORIZONTAL BARS WITH MORE THAN 12 INCHES OF CONCRETE CAST BELOW THE BARS.

DETAIL 6/16 NTS

MASONRY REINFORCING LAP SPLICES	
MASONRY STRENGTH	f'_m= 1500 PSI
BAR SIZE	LAP SPLICE LENGTH
#3	1'-4"
#4	1'-9"
#5	2'-3"
#6	4'-1"
#7	5'-3"
#8	6'-0"
#9	6'-10"

NOTES:
1. CLEAR COVER TO BARS BEING SPLICED SHALL BE A MINIMUM OF 3 INCHES.

DETAIL 7/16 NTS

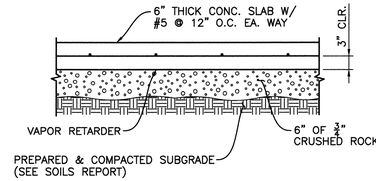

TYPICAL SLAB SECTION

DETAIL 8/16 3/4" = 1'-0"

NOTES: 1. SAW-CUTTING SHALL BE COMPLETED NO MORE THAN 12 HOURS AFTER PLACING CONCRETE SLAB.
2. JOINTS SHALL BE LOCATED AT 12'-0" O.C. MAX.
3. IN LIEU OF SAW-CUTTING, CONTRACTOR MAY EMBED A 1½" DEEP ZIP STRIP IN SLAB.

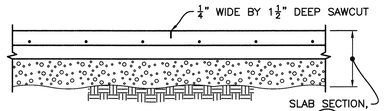

WEAKENED PLANE JOINT

DETAIL 9/16 3/4" = 1'-0"

NOTE: PROVIDE WEAKENED PLANE JOINTS PER 9/16.

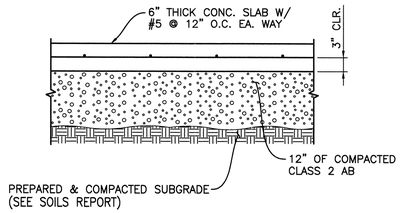

CONCRETE PAVEMENT

DETAIL 10/16 3/4" = 1'-0"

REGISTERED PROFESSIONAL ENGINEER JEFFREY A. FINN 43928 CIVIL & STRUCTURAL Exp. 6/30/19 STATE OF CALIFORNIA 7/21/17

City of Santa Rosa
Transportation & Public Works

NO.	DATE	REVISION	BY

DATE: JULY 21, 2017
CHK BY: TEE
SCALE: AS SHOWN
DWN BY: REM
APPROVED: Acting Deputy Director - Engineering
By Andrew Allen Date 6/1/17

CITY OF SANTA ROSA
FARMERS LANE WELL FACILITIES REHABILITATION

TYPICAL DETAILS

CONTRACT NO. C01839
SHEET 16 OF 40
FILE NO. 2017-0014

WELL REHABILITATION

Finn Design Group, Inc.
Structural Engineers
5000 Hopyard Road, Suite 300
Pleasanton, CA 94588
OFFICE (925) 737-1600
FAX (925) 737-1601

M:\1drawings\16-dwgs\16-160.1 Farmers Lane Well Buildings\16-1601S3.dwg 7/11/2017 4:24 PM rmoe

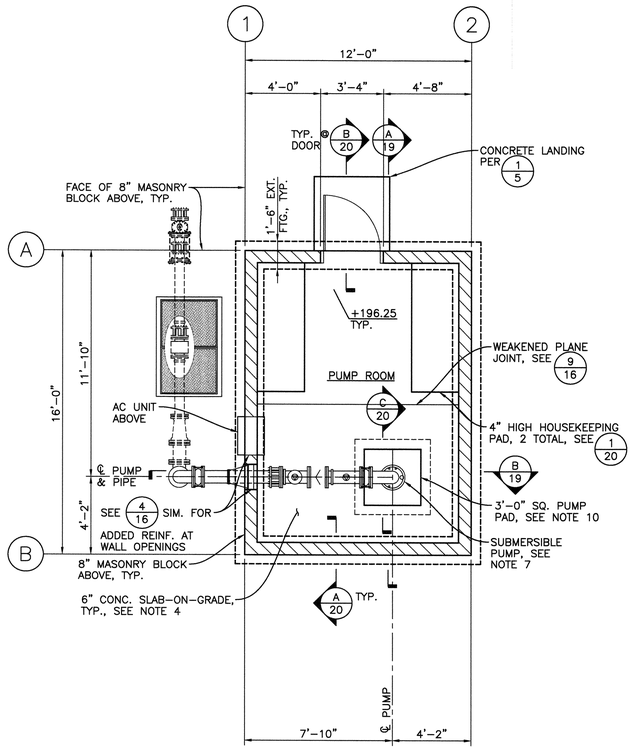

WELL 4-1 FOUNDATION PLAN
1/4" = 1'-0"

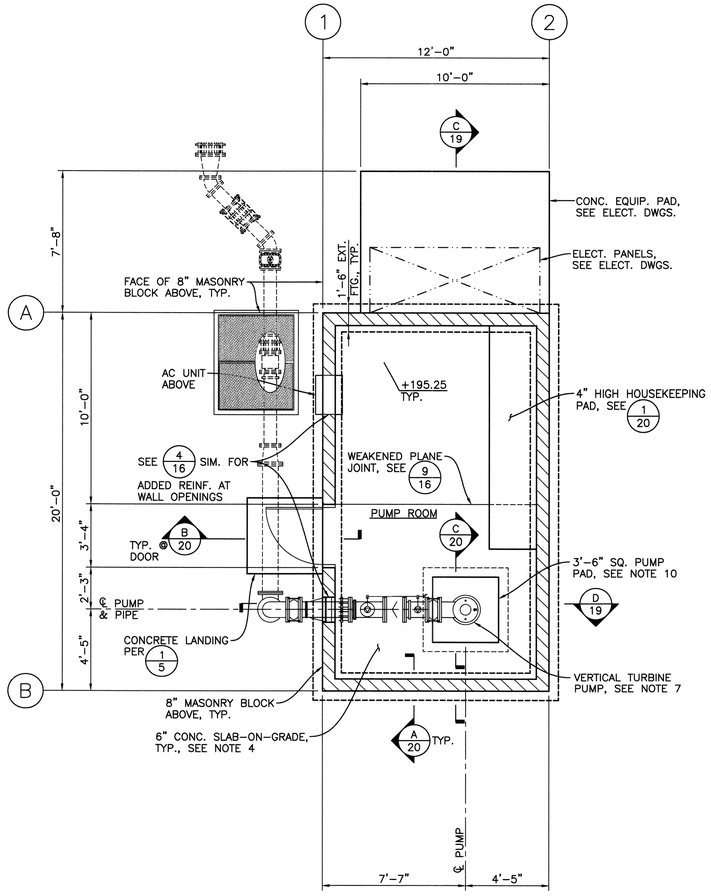

WELL 4-2 FOUNDATION PLAN
1/4" = 1'-0"

FOUNDATION PLAN NOTES:

1. SEE GENERAL NOTES & SPECIFICATIONS ON SHEET 14. SEE FLOOR PLANS ON SHEET 12 FOR DIMENSIONS & NOTES NOT SHOWN.
2. +195.25 DENOTES TOP OF CONCRETE SLAB OR PAD ELEVATION. WHERE GIVEN, ELEVATION BELOW LINE INDICATES TOP OF CONCRETE SLAB ELEVATION IN TRENCH OR PIT.
3. → DENOTES DIRECTION OF SLAB SLOPE. PROVIDE A MIN. SLOPE OF 0.5% AT SLABS & TRENCHES INDICATED.
4. SLAB SECTION:
   - 6" CONCRETE SLAB W/ #5 @ 12" O.C. EACH WAY
   - VAPOR RETARDER
   - 6" OF ¾" CRUSHED ROCK
   - SOIL SUBGRADE PREPARED PER SOILS REPORT
5. DENOTES MASONRY BLOCK WALL
6. MATERIAL SPECIFICATIONS
   CONCRETE: MIN. 28 DAY STRENGTH = 4,000 psi
   REINFORCING STEEL: ASTM A615, GRADE 60
   CONCRETE MASONRY: ASTM C90
   MORTAR: ASTM C270, TYPE S, f'c = 1,800 psi
   GROUT: ASTM C476, f'c = 2,500 psi
   CMU ASSEMBLY: f'm = 1,500 psi
7. ANCHORAGE OF PUMP SHALL BE BY THE CONTRACTOR. CONTRACTOR SHALL SUBMIT DRAWINGS AND CALCULATIONS FOR THE PUMP ANCHORAGE FOR REVIEW. SEE PROJECT SPECIFICATIONS. MIN. ANCHORAGE SHALL BE A 1"ø ANCHOR BOLT AT EACH CORNER OF BASE ℄, 4 MIN. TOTAL PER PUMP.
8. SEE SHEET 13 FOR ARCHITECTURAL FINISH SCHEDULE SHOWING INTERIOR FINISH REQUIREMENTS.
9. SEE SHEET 16 FOR TYPICAL CONCRETE AND MASONRY DETAILS.
10. PUMP PAD DIMENSIONS SHALL BE VERIFIED WITH PUMP MANUFACTURER PRIOR TO BEGINNING CONSTRUCTION.

REGISTERED PROFESSIONAL ENGINEER
JEFFREY A. FINN
No. 43928
No. 6072
Exp. 6/30/19
CIVIL & STRUCTURAL
STATE OF CALIFORNIA
7/21/17

City of Santa Rosa
Transportation & Public Works

NO.	DATE	REVISION	BY

DATE: JULY, 21 2017
CHK BY: TEE
SCALE: AS SHOWN
DWN BY: REM
APPROVED: Acting Deputy Director – Engineering
By _____ Date 8/1/17
Andrew Allen

CITY OF SANTA ROSA
FARMERS LANE WELL FACILITIES
REHABILITATION

WELL 4-1 & 4-2 FOUNDATION PLANS

Finn Design Group, Inc.
Structural Engineers
5000 Hopyard Road, Suite 300
Pleasanton, CA 94588
OFFICE (925) 737-1600
FAX (925) 737-1601

CONTRACT NO. C01839
SHEET 17 OF 40
FILE NO. 2017-0014
WELL REHABILITATION

M:\1drawings\16-dwgs\16-160.1 Farmers Lane Well Buildings\16-1601S4.dwg 7/20/2017 1:09 PM rmoe

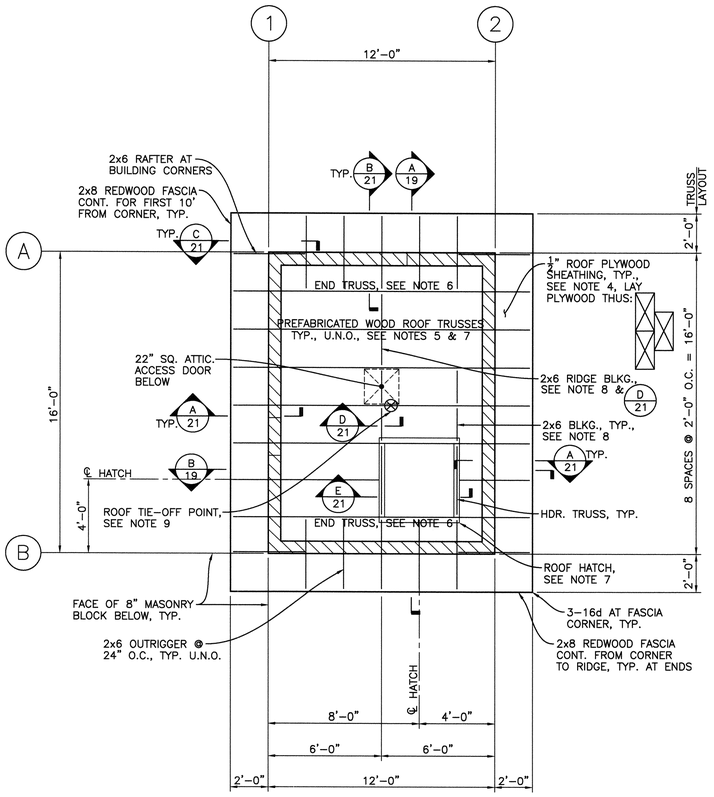

WELL 4-1 ROOF FRAMING PLAN
1/4" = 1'-0"

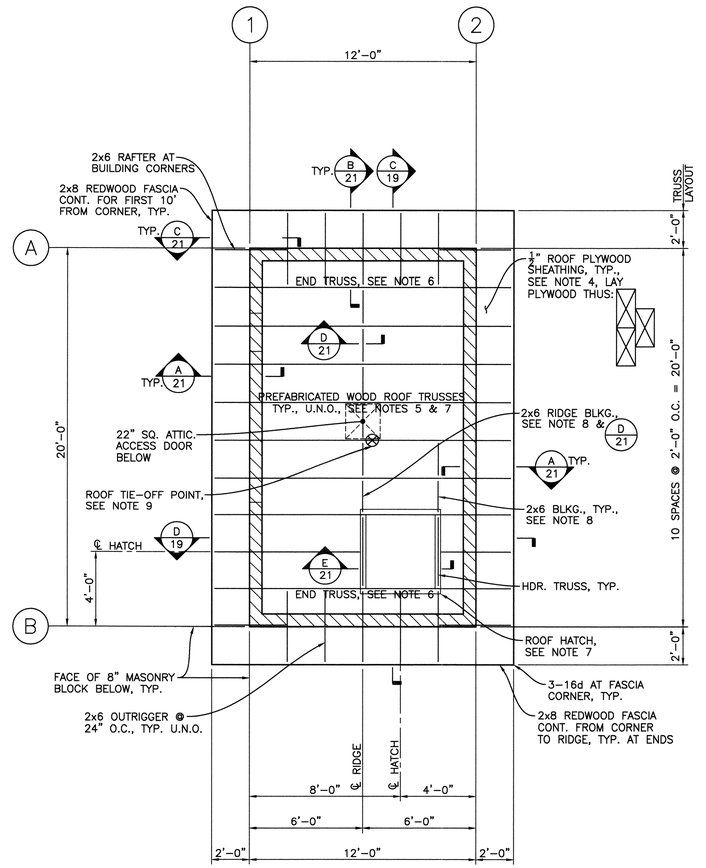

WELL 4-2 ROOF FRAMING PLAN
1/4" = 1'-0"

ROOF FRAMING PLAN NOTES:

1. SEE GENERAL NOTES & SPECIFICATIONS ON SHEET 14.
2. 4:12 DENOTES DIRECTION AND SLOPE OF ROOF.
3. DENOTES MASONRY BLOCK WALL.
4. ROOF PLYWOOD SHEATHING SHALL BE 1/2" CDX PLYWOOD. SEE PROJECT SPECIFICATIONS. PLYWOOD SHALL BE INSTALLED WITH FACE GRAIN PERPENDICULAR TO SUPPORTS. ATTACH PLYWOOD TO SUPPORTING FRAMING W/ 10d COMMON AT ALL EDGES AT 4" O.C. AND 10d COMMON AT 12" O.C. IN THE FIELD. ALL UNSUPPORTED PLYWOOD EDGES SHALL BE BLOCKED W/ 2x4 BLOCKING AND EDGE-NAILED.
5. ALL TRUSSES SHALL BE CAPABLE OF CARRYING A MINIMUM LATERAL SEISMIC LOAD OF 1,400 LBS. (SERVICE LOAD LEVEL) EVENLY DISTRIBUTED TO THE TRUSS TOP CHORD.
6. END TRUSS LOADING FROM OUTRIGGERS AND FASCIAS SHALL BE AS FOLLOWS:

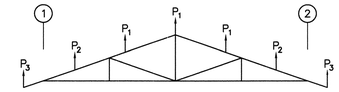

LOAD	DEAD	LIVE
P_1	30 LBS.	40 LBS.
P_2	45 LBS.	60 LBS.
P_3	30 LBS.	40 LBS.

END TRUSS

7. CONTRACTOR SHALL COORDINATE ROOF TRUSS LAYOUT W/ ROOF TRUSS FABRICATOR AND ROOF HATCH MANUFACTURER PRIOR TO SUBMITTING ROOF TRUSS SUBMITTAL TO THE ENGINEER FOR REVIEW.
8. PROVIDE 2x6 BLOCKING BETWEEN TRUSSES WHERE SHOWN. CONNECT ENDS TO TRUSSES AS SHOWN IN D 21. INSTALL 'CS14' STRAP OVER BLOCKING & HEADER TRUSSES. AT RIDGE, INSTALL CONT. STRAP OVER FULL-LENGTH OF RIDGE.
9. ROOF TIE-OFF POINT SHALL BE PER PROJECT SPECIFICATIONS. ROOF TRUSS SHALL BE CAPABLE OF CARRYING A MINIMUM LIVE LOAD OF 5,000 LBS. APPLIED EITHER HORIZONTALLY OR VERTICALLY AT 6" ABOVE THE TOP OF THE TOP CHORD.

REGISTERED PROFESSIONAL ENGINEER
JEFFREY A. FINN
43928
Exp. 6/30/19
CIVIL & STRUCTURAL
STATE OF CALIFORNIA
7/21/17

City of Santa Rosa
Transportation & Public Works

NO.	DATE	REVISION	BY

DATE: JULY 21, 2017
CHK BY: TEE
SCALE: AS SHOWN
DWN BY: REM
APPROVED: Acting Deputy Director – Engineering
By Andrew Allen Date 9/1/17

CITY OF SANTA ROSA
FARMERS LANE WELL FACILITIES
REHABILITATION

WELL 4-1 & 4-2
ROOF FRAMING PLANS

CONTRACT NO. C01839
SHEET 18 OF 40
FILE NO. 2017-0014

WELL REHABILITATION

Finn Design Group, Inc.
Structural Engineers
5000 Hopyard Road, Suite 300
Pleasanton, CA 94588
OFFICE (925) 737-1600
FAX (925) 737-1601

M:\1drawings\16-dwgs\16-160.1 Farmers Lane Well Buildings\16-1601S5.dwg 7/20/2017 9:31 AM rmoe

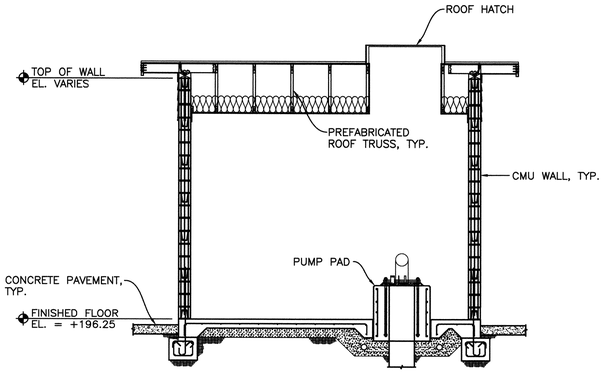

SECTION A 19
1/4" = 1'-0"

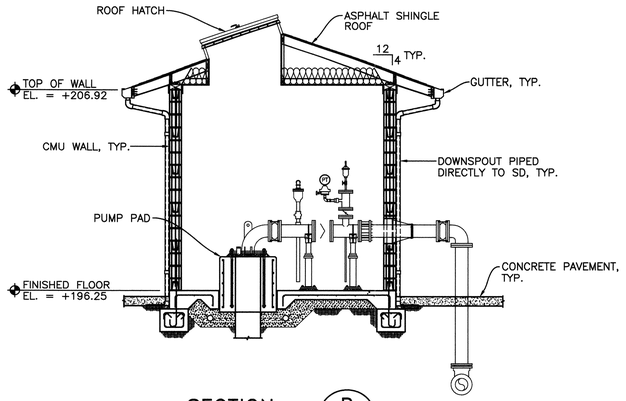

SECTION B 19
1/4" = 1'-0"

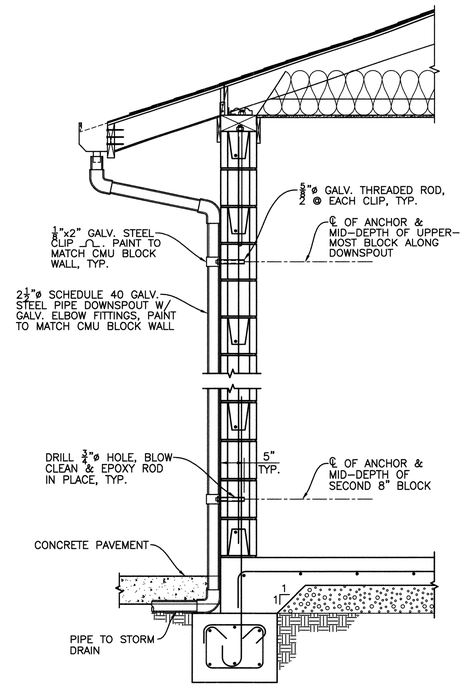

SECTION E 19
3/4" = 1'-0"

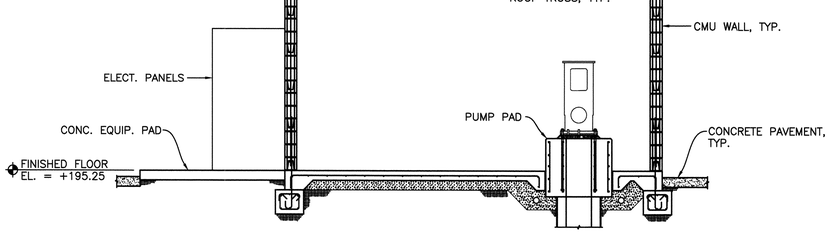

SECTION C 19
1/4" = 1'-0"

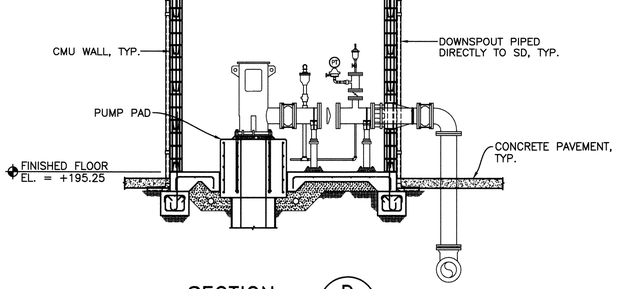

SECTION D 19
1/4" = 1'-0"

REGISTERED PROFESSIONAL ENGINEER
JEFFREY A. FINN
43928
16772
Exp. 6/30/19
CIVIL & STRUCTURAL
STATE OF CALIFORNIA
7/21/17

City of Santa Rosa
Transportation & Public Works

NO.	DATE	REVISION	BY

DATE: JULY 21, 2017
CHK BY: TEE
SCALE: AS SHOWN
DWN BY: REM

APPROVED: *Acting Deputy Director – Engineering*
By _____ Date 8/1/17
Andrew Allen

CITY OF SANTA ROSA
FARMERS LANE WELL FACILITIES
REHABILITATION

BUILDING SECTIONS

CONTRACT NO. C01839
SHEET 19 OF 40
FILE NO. 2017-0014

WELL REHABILITATION

Finn Design Group, Inc.
Structural Engineers
5000 Hopyard Road, Suite 300
Pleasanton, CA 94588
OFFICE (925) 737-1600
FAX (925) 737-1601

M:\1drawings\16-dwgs\16-160.1 Farmers Lane Well Buildings\16-1601S6.dwg 7/20/2017 9:36 AM rmoe

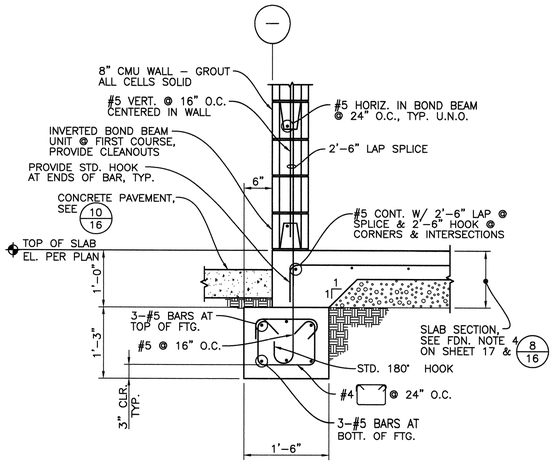

SECTION A 20
3/4" = 1'-0"

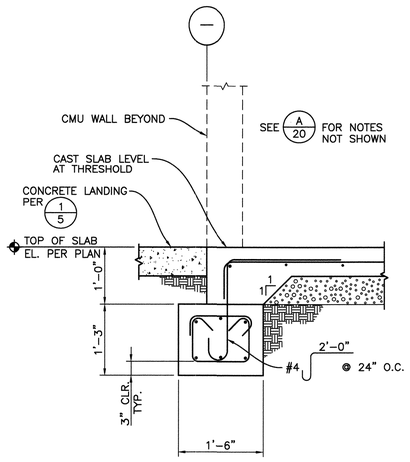

SECTION B 20
3/4" = 1'-0"

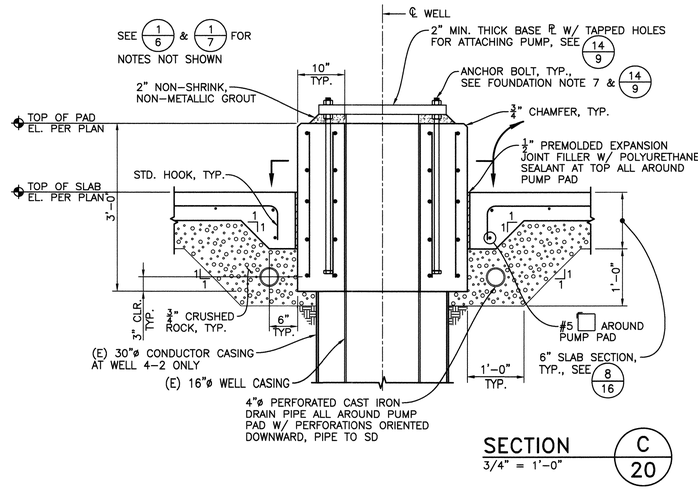

SECTION C 20
3/4" = 1'-0"

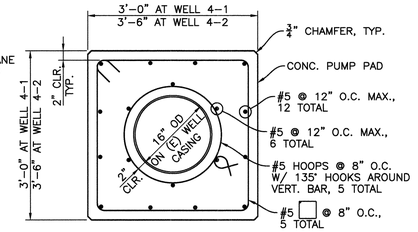

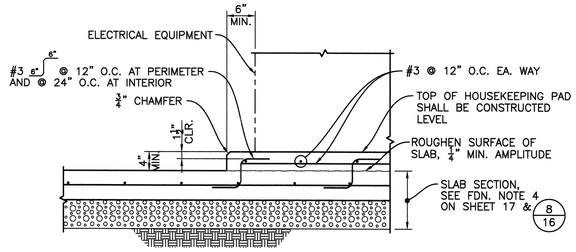

DETAIL 1/20
3/4" = 1'-0"

M:\1drawings\16-dwgs\16-160.1 Farmers Lane Well Buildings\16-160157.dwg 7/11/2017 4:22 PM rmoe

REGISTERED PROFESSIONAL ENGINEER
JEFFREY A. FINN
43928
Exp. 6/30/19
CIVIL & STRUCTURAL
STATE OF CALIFORNIA
7/21/17

City of Santa Rosa
Transportation & Public Works

NO.	DATE	REVISION	BY

DATE: JULY 21, 2017
CHK BY: TEE
SCALE: AS SHOWN
DWN BY: REM

APPROVED: Acting Deputy Director – Engineering
By Andrew Allen Date 6/1/17

CITY OF SANTA ROSA
FARMERS LANE WELL FACILITIES REHABILITATION

FOUNDATION SECTIONS & DETAIL

CONTRACT NO. C01839
SHEET 20 OF 40
FILE NO. 2017-0014

Finn Design Group, Inc.
Structural Engineers
5000 Hopyard Road, Suite 300
Pleasanton, CA 94588
OFFICE (925) 737-1600
FAX (925) 737-1601

WELL REHABILITATION

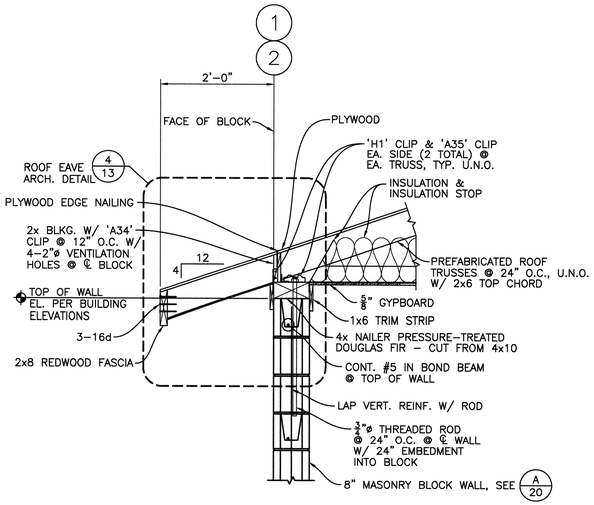

SECTION A 21
3/4" = 1'-0"

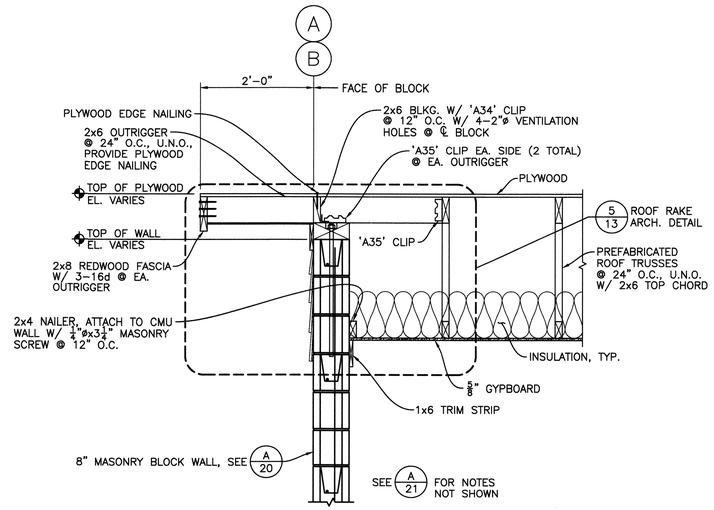

SECTION B 21
3/4" = 1'-0"

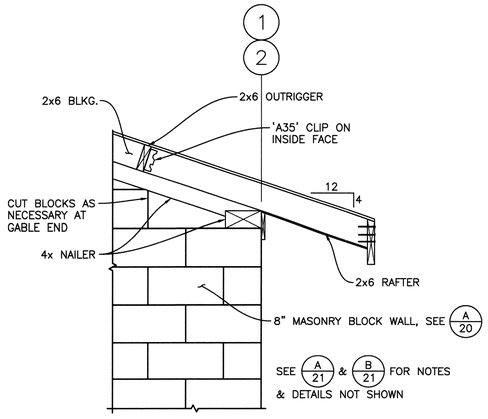

SECTION C 21
3/4" = 1'-0"

SECTION D 21
3/4" = 1'-0"

SECTION E 21
3/4" = 1'-0"

REGISTERED PROFESSIONAL ENGINEER
JEFFREY A. FINN
43928
Exp. 6/30/19
CIVIL & STRUCTURAL
STATE OF CALIFORNIA
7/21/17

City of Santa Rosa
Transportation & Public Works

NO.	DATE	REVISION	BY

SCALE: AS SHOWN
DWN BY: REM
DATE: JULY 21, 2017
CHK BY: TEE

APPROVED: Acting Deputy Director – Engineering
By _____ Date 8/1/17
Andrew Allen

CITY OF SANTA ROSA
FARMERS LANE WELL FACILITIES
REHABILITATION

ROOF FRAMING SECTIONS & DETAILS

CONTRACT NO. C01839
SHEET 21 OF 40
FILE NO. 2017-0014

WELL REHABILITATION

FDG Finn Design Group, Inc.
Structural Engineers
5000 Hopyard Road, Suite 300
Pleasanton, CA 94588
OFFICE (925) 737-1600
FAX (925) 737-1601

M:\1drawings\16-dwgs\16-160.1 Farmers Lane Well Buildings\16-160158.dwg 7/11/2017 4:22 PM rmoe

MISCELLANEOUS ELECTRICAL & INSTRUMENTATION ABBREVIATIONS

&	AND	NL	NIGHT LIGHT
@	AT	NO	NORMALLY OPEN
A	AMBER, AMPERES	NP	NAMEPLATE
AC	ALTERNATING CURRENT	NTS	NOT TO SCALE
AFF	ABOVE FINISHED FLOOR	(N)	NEW
AI	ANALOG INPUT	OC	ON CENTER
AIC	AMP INTERRUPTING CAPACITY SYMMETRICAL	OI	OPERATOR INTERFACE
ALT	ALTERNATOR	OL	OVERLOAD
AM	AMMETER	ORP	OXIDATION REDUCTION POTENTIAL
AO	ANALOG OUTPUT	P	PHASE, POLE
AWG	AMERICAN WIRE GAUGE	PB	PUSHBUTTON
B	BLUE	PBX	PULL BOX
BC	BARE COPPER	PC	PERSONAL COMPUTER
BKR	CIRCUIT BREAKER	PF	POWER FAIL
C	CONDUIT	PFR	POWER (PHASE) FAIL RELAY
CAP	CAPACITOR	PH	HYDROGEN ION CONCENTRATION
CB	CIRCUIT BREAKER	PI	PULSE INPUT
CKT	CIRCUIT	PLC	PROGRAMMABLE LOGIC CONTROLLER
COAX	COAXIAL CABLE	PMP	PUMP
COMM	COMMUNICATION PORT	PNL	PANEL
CPT	CONTROL POWER TRANSFORMER	POT	POTENTIOMETER
CR	CONTROL RELAY	PR	PAIR, TWISTED & SHIELDED CABLE
CT	CURRENT TRANSFORMER	PRESS	PRESSURE
CTQ	CONSTANT TORQUE	PRI	PRIMARY
CTR	CYCLE COUNTER	PROVIDE	FURNISH, INSTALL & CONNECT
CU	COPPER	PRR	POWER RELAY
DC	DIRECT CURRENT	PRV	PRESSURE REDUCING VALVE
DET	DETAIL	PS	PRESSURE SWITCH, POWER SUPPLY
DI	DIGITAL INPUT	PT	POTENTIAL TRANSFORMER
DIAG	DIAGRAM	PTT	PUSH TO TEST
DISC	DISCONNECT	PV	PROCESS VARIABLE
DO	DIGITAL OUTPUT	PVC	POLY VINYL CHLORIDE
DPDT	DOUBLE POLE DOUBLE THROW	PWR	POWER
DWG	DRAWING	R	RED
ELEV	ELEVATION	RCT	REPEAT CYCLE TIMER
EMT	ELECTRICAL METALLIC TUBING	REF	REFERENCE
ETM	ELAPSED TIME METER	RFI	RADIO FREQUENCY INTERFERENCE
(E)	EXISTING	RIO	REMOTE I/O
F	FRAME	RMS	ROOT MEAN SQUARED
FC	FAIL CLOSED	RT	RESET TIMER
FCS	FIELD CONTROL STATION	RTD	RESISTANCE TEMPERATURE DETECTOR
FLA	FULL LOAD AMPS	RTM	RUN TIME METER
FLP	FAIL LAST POSITION	RTU	REMOTE TELEMETRY UNIT
FO	FAIL OPEN	RVNR	REDUCED VOLTAGE NON-REVERSING
FLEX	FLEXIBLE, METAL LIQUID TIGHT CONDUIT	(R)	REWIRE, RELOCATE, REVISE, REUSE
FS	FLOW SWITCH OR FULL SPEED	S	SWITCH
FV, FVNR	FULL VOLTAGE NON-REVERSING	SCH	SCHEDULE
FVR	FULL VOLTAGE REVERSING	SEC	SECONDARY
FWD	FORWARD	SECS	SECONDS
(F)	FUTURE	SEL	SELECTOR
G	GREEN	SFA	SERVICE FACTOR AMPS
GALV	GALVANIZED	SP	SET POINT
GFI	GROUND FAULT CIRCUIT INTERRUPTER	SPEC	SPECIFICATION
GND	GROUND	SS	STAINLESS STEEL
GRS	GALVANIZED RIGID STEEL CONDUIT	SSS	SOLID SOFT STARTER
GRS-PVC	PVC COATED GRS CONDUIT	STT	START
GS	GALVANIZED STEEL	STP	STOP
HI	HIGH	SV	SOLENOID VALVE
HIM	HUMAN INTERFACE MODULE	SW	SWITCH
HOA	HAND-OFF-AUTO	SWBD	SWITCHBOARD
HP	HORSEPOWER	SYMM	SYMMETRICAL
HS	HAND SWITCH	T	TRIP
HTR	HEATER	TB	TERMINAL BLOCK
HZ	HERTZ (CYCLES PER SECOND)	TC	TIME CLOCK
HZD	HAZARDOUS AREA, EXPLOSION PROOF	TDOD	TIME DELAY ON DE-ENERGIZATION
I	INTERLOCK	TDOE	TIME DELAY ON ENERGIZATION
I/O	INPUT/OUTPUT	TEL	TELEMETRY
ICR	INSTRUMENTATION CONTROL RELAY	TELCO	TELEPHONE COMPANY
INCAN	INCANDESCENT	TM	THERMAL MAGNETIC
INST	INSTANTANEOUS	TEMP	TEMPERATURE
ISC	SHORT CKT INTERRUPTING CURRENT (SYMM)	TR	TIME DELAY RELAY
ISR	INTRINSICALLY SAFE RELAY	TRIAD	TWISTED & SHIELDED 3 CONDUCTOR
J	JUNCTION BOX	TS	TEMPERATURE SWITCH
K	KILO, PREFIX	TSPR	TWISTED & SHIELDED PAIR
LA	LIGHTNING ARRESTOR	TYP	TYPICAL
LC	LIGHTING CONTACTOR	UG	UNDERGROUND
LEL	LOWER EXPLOSIVE LIMIT	UON	UNLESS OTHERWISE NOTED
LO	LOW	UPS	UNINTERRUPTIBLE POWER SUPPLY
LOS	LOCK-OUT STOP SWITCH	V	VOLTAGE
LPU	LINE PROTECTION UNIT	VA	VOLT AMPS
LR	LATCHING RELAY	VAR	VOLT AMP REACTIVE
LS	LEVEL SWITCH	VDC	VOLTAGE DIRECT CURRENT
M	MOTOR CONTACTOR	VFD	VARIABLE FREQUENCY DRIVE
MAX	MAXIMUM	VLV	VALVE
MCC	MOTOR CONTROL CENTER	VM	VOLTMETER
MCM	THOUSAND CIRCULAR MILS	VTQ	VARIABLE TORQUE
MCP	MOTOR CIRCUIT PROTECTOR	W	WHITE, WATTS
MD	MOISTURE DETECTION	WHM	WATT-HOUR METER
MH	MANHOLE	WM	WATTMETER
MIN	MINIMUM	WP	WATERPROOF, WEATHER PROOF
MINS	MINUTES	WS	TORQUE SWITCH
MNFR	MANUFACTURER	XFMR	TRANSFORMER
MODEM	MODULATOR/DEMODULATOR	XS	MISCELLANEOUS SWITCH
MOV	MOTOR OPERATED VALVE	Y	YELLOW
MTR	MOTOR	Z	IMPEDANCE
N	NEUTRAL	ZS	LIMIT SWITCH
NC	NORMALLY CLOSED		
NIC	NOT IN CONTRACT		

SWITCHES – PROCESS

SYMBOL	DESCRIPTION
FS	FLOW SWITCH – CLOSES UPON INCREASING FLOW
FS	FLOW SWITCH – OPENS UPON INCREASING FLOW
LS	LEVEL SWITCH – CLOSES UPON INCREASING LEVEL
LS	LEVEL SWITCH – OPENS UPON INCREASING LEVEL
PS	PRESSURE SWITCH – CLOSES UPON INCREASING PRESSURE (INCREASING VACUUM)
PS	PRESSURE SWITCH – OPENS UPON INCREASING PRESSURE (INCREASING VACUUM)
TS	TEMPERATURE SWITCH – CLOSES UPON INCREASING TEMPERATURE
TS	TEMPERATURE SWITCH – OPENS UPON INCREASING TEMPERATURE
ZS	LIMIT SWITCH – CLOSES AT SET LIMIT
ZS	LIMIT SWITCH – OPENS AT SET LIMIT
ZS	PROXIMITY SWITCH – CLOSES UPON DECREASING DISTANCE
ZS	PROXIMITY SWITCH – OPENS UPON DECREASING DISTANCE
WS	TORQUE SWITCH – CLOSES UPON INCREASING TORQUE
WS	TORQUE SWITCH – OPENS UPON INCREASING TORQUE

SWITCHES – OPERATOR

SYMBOL	DESCRIPTION
SW	TOGGLE OR DISCONNECT SWITCH
PB	PUSHBUTTON – NORMALLY OPEN, MOMENTARY ACTION
PB	PUSHBUTTON – NORMALLY CLOSED, MOMENTARY ACTION
PB	PUSHBUTTON, MECHANICALLY INTERLOCKED, DOUBLE CIRCUIT – NORMALLY CLOSED AND NORMALLY OPEN, MAINTAINED ACTION
H O A	SELECTOR SWITCH, 3 POSITION – CONTACT STATUS SHOWN EXISTS AT POSITION OF H-HAND, O-OFF, OR A-AUTO
2-1 1-2	SELECTOR SWITCH, 2 POSITION – CONTACT STATUS SHOWN EXISTS AT POSITION AS SHOWN

DEVICES – RELAY

SYMBOL	DESCRIPTION
CR 1 — 28, 111	CONTROL RELAY CR1 WITH NORMALLY OPEN CONTACT ON LINE 28 & NORMALLY CLOSED CONTACT ON LINE 111
TR 2	TIME DELAY RELAY TR2 – ADJUSTABLE TIME DELAY RANGE & SETTING AS SHOWN
TDOE TDOD	TIME DELAY ON ENERGIZATION TIME DELAY ON DE-ENERGIZATION
M1	CONTACTOR OR STARTER M1
SV	SOLENOID
CR1 (105)	NORMALLY OPEN, RELAY CONTACT – ACTUATED BY RELAY CR1 COIL LOCATED ON LINE 105
CR1	NORMALLY CLOSED, RELAY CONTACT – ACTUATED BY RELAY CR1
TR2	NORMALLY OPEN, TIME DELAY RELAY CONTACT – CONTACT CLOSES AFTER TR2 IS ENERGIZED
TR2	NORMALLY CLOSED, TIME DELAY RELAY CONTACT – CONTACT OPENS AFTER TR2 IS ENERGIZED
TR2	NORMALLY OPEN, TIME DELAY RELAY CONTACT – CONTACT OPENS AFTER TR2 IS DE-ENERGIZED
TR2	NORMALLY CLOSED, TIME DELAY RELAY CONTACT – CONTACT CLOSES AFTER TR2 IS DE-ENERGIZED
TR2	CONTACT OPENS AND CLOSES IN A TIMED REPEAT CYCLE

DEVICES – FRONT PANEL

SYMBOL	DESCRIPTION
X	INDICATING LIGHT, LETTER "X" INDICATES COLOR: R=RED G=GREEN, A=AMBER, W=WHITE Y=YELLOW, B=BLUE
PTT X	INDICATING LIGHT, PUSH TO TEST
AM	AMP METER
VM	VOLT METER
ETM	ELAPSED TIME METER
RTM	RUN TIME METER
XS	MULTI-POSITION SWITCH WHERE LETTER "X" IS FUNCTION: A=AMP, V=VOLT

COMPONENTS

SYMBOL	DESCRIPTION
RES	RESISTOR
	POTENTIOMETER
	CAPACITOR, FIXED
	CAPACITOR, ADJUSTABLE
	DIODE
	DIODE, ZENER
	VARISTOR TRANSIENT VOLTAGE SUPPRESSOR
	VOLTAGE SURGE SUPPRESSOR, AC
	LIGHT EMITTING DIODE
	TRANSISTOR
	RESISTANCE TEMPERATURE DETECTOR (RTD)
	THERMOCOUPLE (T/C)
	THERMISTOR

DEVICES – MISCELLANEOUS

SYMBOL	DESCRIPTION
	AUDIBLE ALARM
TG	TACHOMETER GENERATOR
	BATTERY
HTR	HEATER
	3 PHASE HEATER
# HP	3 PHASE MOTOR # = MOTOR HP
# HP	SINGLE PHASE MOTOR
	TRANSFORMER

DEVICES – PROTECTIVE

SYMBOL	DESCRIPTION
	DISCONNECT, 3 POLE
	CIRCUIT BREAKER, 3 POLE THERMAL MAGNETIC (TM) OR MOTOR CIRCUIT PROTECT (MCP)
OL	THERMAL OVERLOAD CONTACT
	THERMAL OVERLOAD ELEMENT
	FUSE WITH BLOWN FUSE INDICATING LIGHT
	FUSE

WIRING – CONNECTIONS

SYMBOL	DESCRIPTION
	PANEL OR EQUIPMENT WIRING
	FIELD WIRING
	CONDUCTORS – NOT CONNECTED
	CONDUCTORS – CONNECTED
	GROUND
	CHASSIS OR FRAME GROUND
	PLUG AND RECEPTACLE
	INCOMING LINE
	TERMINAL BLOCKS
	TERMINALS
SHIELD, CONDUCTOR	SHIELDED CABLE

PLAN – SYMBOLS

SYMBOL	DESCRIPTION
	CONDUIT, EXPOSED
	CONDUIT, IN SLAB OR BELOW GRADE
	CONDUIT STUBBED OUT & CAPPED
	CONDUIT BENDS TOWARD OBSERVER
	CONDUIT BENDS AWAY FROM OBSERVER
	CONDUIT ENDS
	CONDUIT CHANGE IN ELEVATION
G	BARE COPPER GROUND WIRE
	GROUND CONNECTION BOLTED TYPE
	GROUND CONNECTION EXOTHERMIC WELD TYPE
	DISCONNECT SWITCH
	FIELD CONTROL STATION WITH JUNCTION BOX
#A	FIELD CONTROL STATION WITH #AMP DISCONNECT SWITCH
	FIELD MOUNTED DEVICE
	SPECIAL RECEPTACLE
J	JUNCTION BOX
T	THERMOSTAT
# A a	LIGHTING, FANS, HEATERS # – CIRCUIT BREAKER NUMBER A – FIXTURE SCHEDULE REF. a – CONTROL SWITCH REFERENCE
#	DUPLEX RECEPTACLE # – CIRCUIT BREAKER NUMBER
# $ 2 a	TOGGLE SWITCH # – CIRCUIT BREAKER NUMBER SUBSCRIPT – CIRCUIT CONTROLLED SUPERSCRIPT – BLANK = 1 POLE 2 = 2 POLE 3 = 3 WAY
#	CONDUIT #

T.E.E.m.
(916) 457-8144

© APRIL 2017
ATEEM ENGINEERING
ALL RIGHTS RESERVED

Z:\ACADDWG\2015\1509b\DESIGN\1509Be001-D.dwg 7/20/2017 2:24 PM Zak-kad

REGISTERED PROFESSIONAL ENGINEER AARON M. KIMYUKI NO. 15698 Exp.6-30-2018 ELECTRICAL STATE OF CALIFORNIA
7/21/2017

City of Santa Rosa
Transportation & Public Works

NO.	DATE	REVISION	BY

SCALE: AS SHOWN
DATE: JULY, 2017
DWN BY: ZKV
CHK BY: SMK
APPROVED: Acting Deputy Director – Engineering
By Andrew Allen Date 8/1/17

CITY OF SANTA ROSA
FARMERS LANE WELL FACILITIES REHABILITATION

ELECTRICAL SYMBOLS & ABBREVIATIONS, E1

CONTRACT NO. C01839

FILE NO. 2017-0014

WELL REHABILITATION

POWER UTILITY SERVICE DIVISION OF WORK	Electrical Contractor	Utility Company
Primary Conduits	X	
Primary Conductors		X
Transformer Pad	X	
Transformer		X
Transformer Connections		X
Transformer Ground Rod	X	
Secondary Conduits	X	
Secondary Conductors		X
Bollards	X	
Meter Enclosure/Base	X	
Utility Meter		X
C/T Enclosure	X	
Current Transformers C/T		X
Meter Room Lock Box	X	

Power Company Information:

Contact Name:	Michael G Miller
Power Utility:	Pacific Gas & Electric
Address:	3965 Occidental Rd
City/State/Zip:	Santa Rosa, CA 95401
Phone:	707 579-6478
Fax:	
E-mail:	MGMi@pge.com

Notes:

1. All Utility Service installation work shall be done by Contractor per Power Utility Engineered drawings (which supersedes what is shown on Contract Drawings).
2. Contractor shall coordinate and schedule all Power Utility inspections and tests in strict compliance with Power Utility requirements.

MMS-WELL 4 LOAD CALCULATIONS	UTILITY SERVICE						PORTABLE GENERATOR SERVICE	
HP DESCRIPTION	LOAD AMPS	QTY LOAD	LOAD VA	RUN AMPS	QTY RUN	RUN VA	QTY RUN	RUN VA
200 WELL PUMP W4-2	240	1	199,532		1	199,532	1	199,532
150 WELL PUMP W4-1	180	1	149,649		1	149,649	1	149,649
PANELBOARD LP-42	7.2		6,008			6,008		6,008
SUBTOTAL	427		355,190	427		355,190		355,190
DIVERSITY FACTOR			100 %				GEN	
200 HP Largest motor @ 25% additional				199,532	0.25	49,883	SIZE 400 KW 500 KVA	
TOTAL						405,073	601 AMPS	
/ 480 V, 3 Phase 4 Wire Service Amps =	487 Amps						AMPS=	427
	1.25 Multiplier						KVA=	355
Service Size =	609 Amps							
Main Size =	800 Amps						%GEN	
% Main Load =	76.1%						LOAD=	71.0%

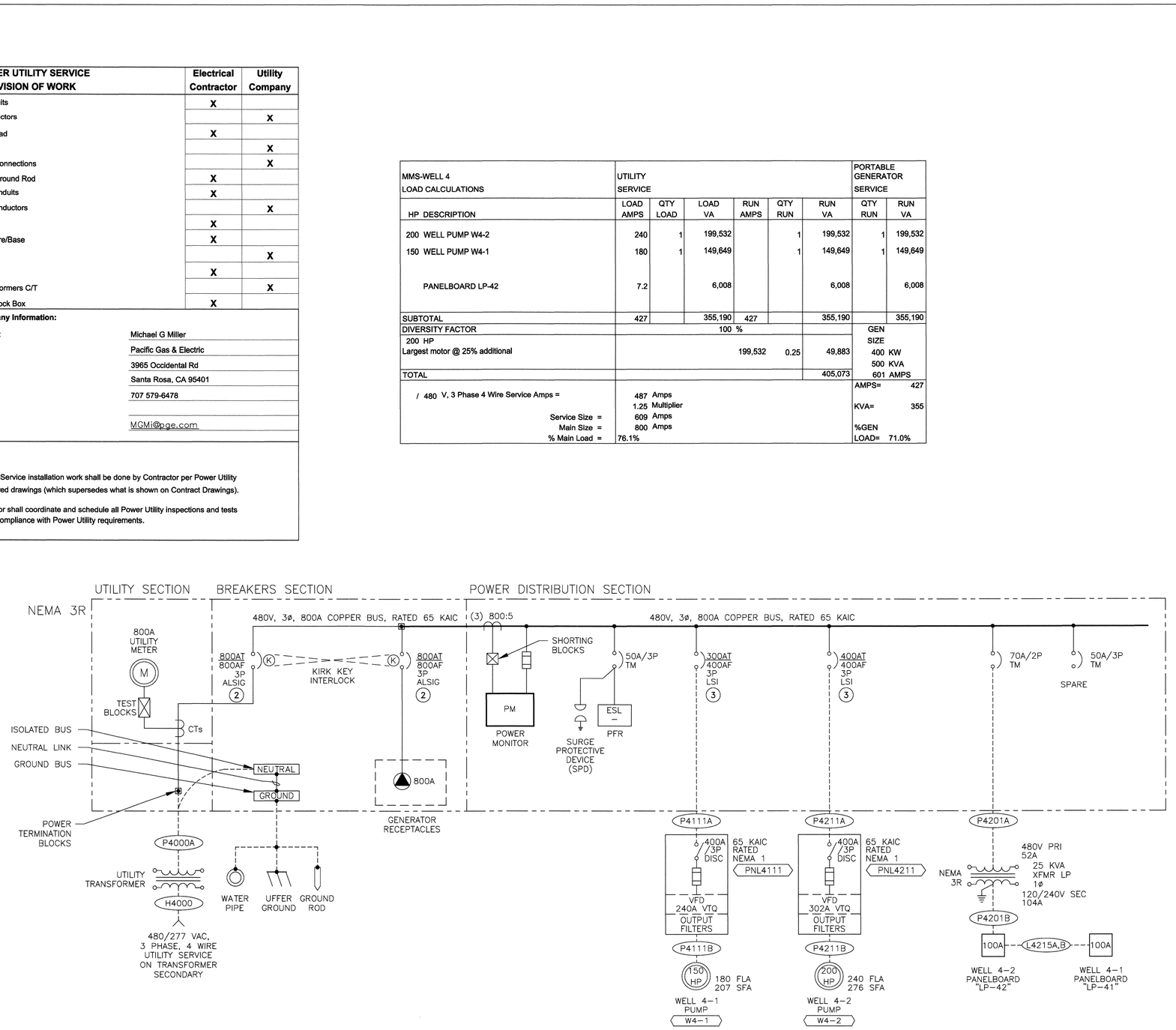

WELL 4 METER/MAIN SWITCHBOARD (MMS) ONE LINE DIAGRAM (1)

NOTES: (1) ALL LUGS SHALL BE COPPER. SIZED FOR WIRES LISTED IN "CONDUIT & WIRE SCHEDULE".

(2) 100% RATED BREAKER TO HAVE ARCFLASH REDUCTION, LONG, SHORT, INSTANTANEOUS AND GROUND (ALSIG) ADJUSTABLE TRIP UNITS.

(3) BREAKER TO HAVE LONG, SHORT AND INSTANTANEOUS (LSI) ADJUSTABLE TRIP UNITS.

T.E.E.M.
(916) 457-8144

© APRIL 2017
ATEEM ENGINEERING
ALL RIGHTS RESERVED

Z:\ACADDWG\2015\1509b\DESIGN\1509Be002-D.dwg 7/20/2017 1:53 PM Zak-kad

REGISTERED PROFESSIONAL ENGINEER — MICHAEL G. KIRK — NO. 15598 — Exp.6-30-2018 — ELECTRICAL — STATE OF CALIFORNIA
7/21/2017

City of Santa Rosa
Transportation & Public Works

NO.	DATE	REVISION	BY

DATE: JULY, 2017 CHK BY: SMK
SCALE: AS SHOWN DWN BY: ZKV
APPROVED: Acting Deputy Director – Engineering
By Andrew Allen Date 8/1/17

CITY OF SANTA ROSA
FARMERS LANE WELL FACILITIES REHABILITATION

WELL 4 METER/MAIN SWITCHBOARD (MMS) ONE LINE DIAGRAM, E2

CONTRACT NO. C01839
SHEET 23 OF 40
FILE NO. 2017-0014

WELL REHABILITATION

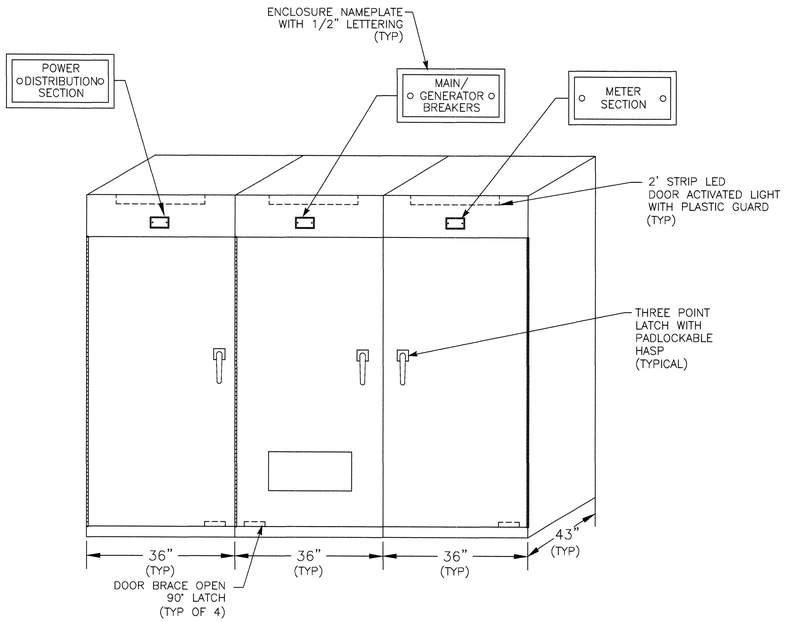

MMS WEATHERWRAP (1)

NOT TO SCALE

NOTES: (1) SWITCHBOARD TO HAVE CUSTOM BUILT WEATHERWRAP PAINTED GREY TO CONTAIN THE SWITCHBOARD SECTIONS.

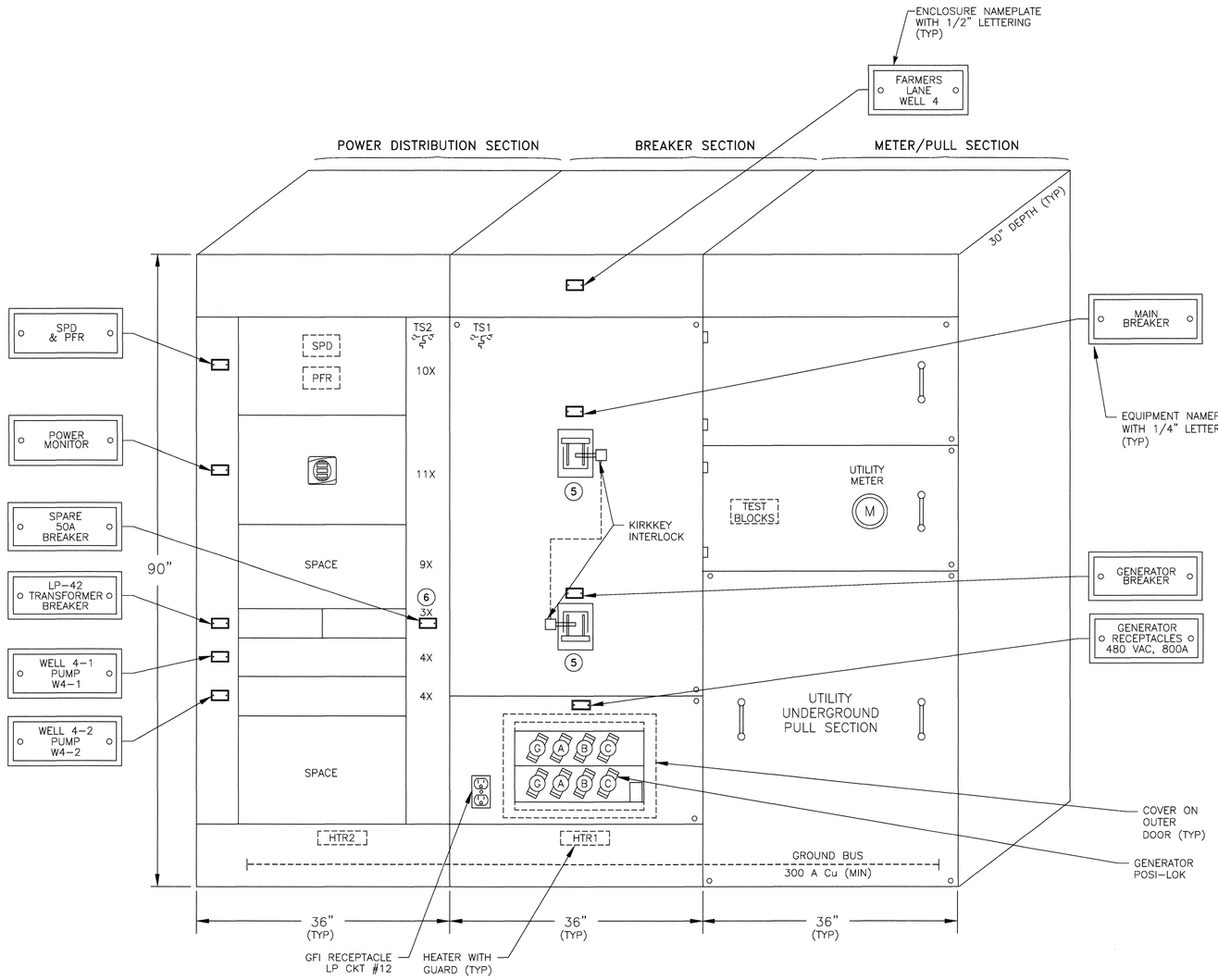

METER/MAIN SWITCHBOARD (MMS) ELEVATION (1) (2) (3) (4)

NOT TO SCALE

NOTES:
(1) REAR ACCESS SHALL NOT BE REQUIRED TO SERVICE OR REPLACE ANY MAIN SWITCHBOARD COMPONENTS.
(2) WEATHER WRAP SHOWN ON DETAIL AT LEFT
(3) EACH BREAKER SHALL HAVE A PADLOCKABLE HASP TO LOCK BREAKER IN THE OFF POSITION.
(4) ALL INTERLOCKING CABLES (WITH LUGS) OR BUS WORK SHALL BE SUPPLIED WITH SWITCHBOARD IN ORDER TO TIE SECTIONS ELECTRICALLY TOGETHER.
(5) PROVIDE BARRIER BEHIND DOOR TO PREVENT INCIDENTAL CONTACT WITH LINE SIDE POWER.
(6) HEIGHT "X" = 1-3/8".

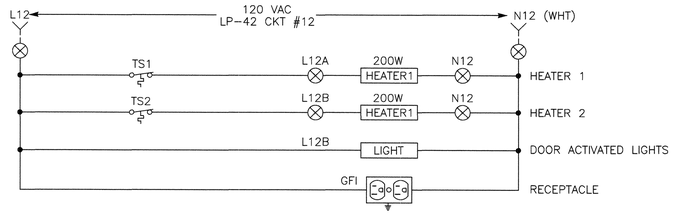

SWITCHBOARD ELEMENTARY DIAGRAM (A / E3)

T.E.E.M.
(916) 457-8144

© APRIL 2017
ATEEM ENGINEERING
ALL RIGHTS RESERVED

Z:\ACADDWG\2015\1509b\DESIGN\1509Be003-D.dwg 7/5/2017 3:48 PM Zak-kad

REGISTERED PROFESSIONAL ENGINEER
JOHN M. KIMMEL
NO. 15698
Exp.6-30-2018
ELECTRICAL
STATE OF CALIFORNIA
7/21/2017

City of Santa Rosa
Transportation & Public Works

NO.	DATE	REVISION	BY

SCALE: AS SHOWN
DATE: JULY, 2017
DWN BY: ZKV
CHK BY: SMK
APPROVED: Acting Deputy Director - Engineering
By Andrew Allen Date 8/1/17

CITY OF SANTA ROSA
FARMERS LANE WELL FACILITIES
REHABILITATION

WELL 4 METER/MAIN SWITCHBOARD (MMS) ELEVATION, E3

CONTRACT NO. C01839
SHEET 24 OF 40
FILE NO. 2017-0014

WELL REHABILITATION

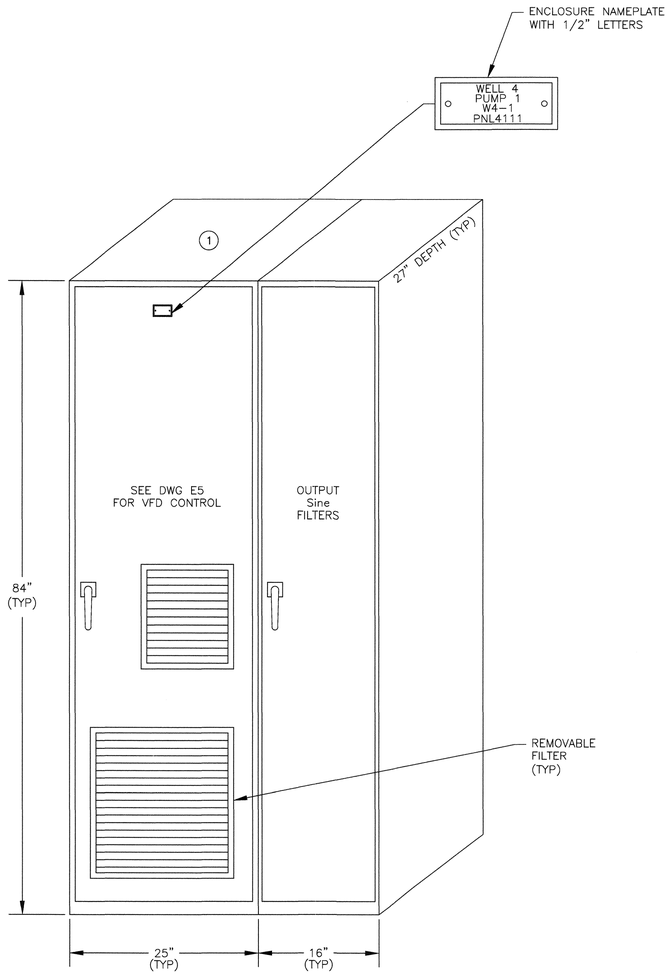

VFD PNL4111 ELEVATION

NOT TO SCALE

NOTES: (1) MINIMUM 24" CLEARANCE FOR VENT ON TOP.

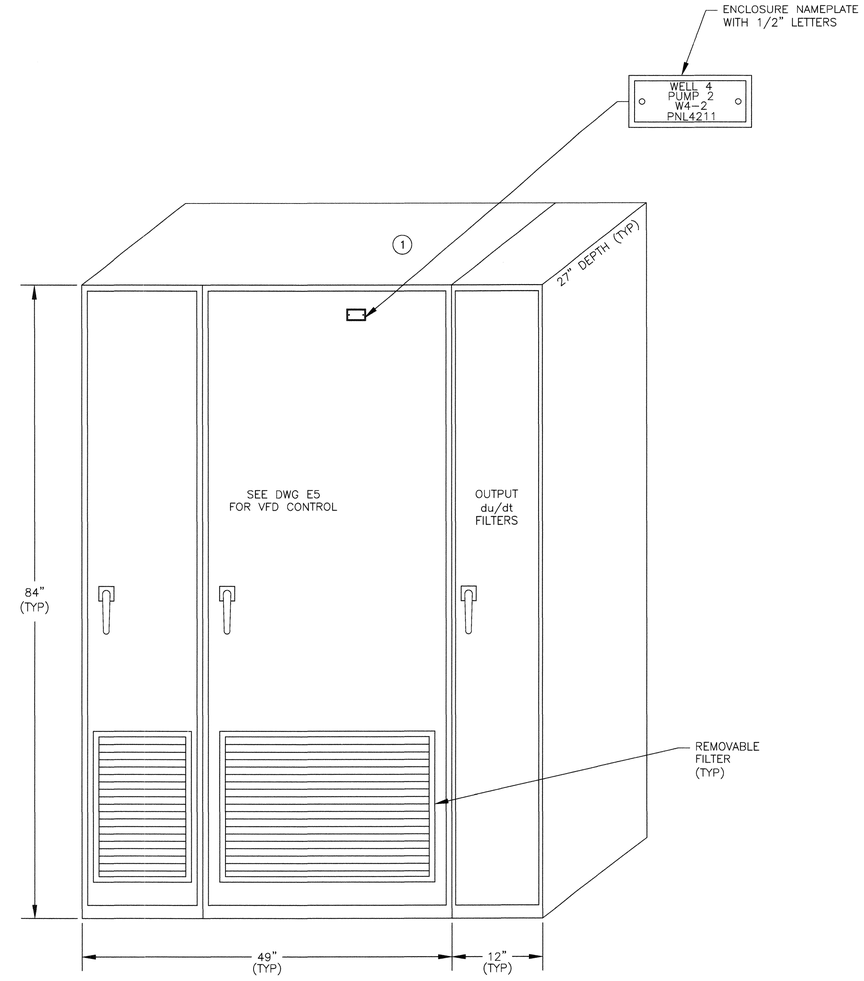

VFD PNL4211 ELEVATION

NOT TO SCALE

NOTES: (1) MINIMUM 24" CLEARANCE FOR VENT ON TOP.

T.E.E.m.
(916) 457-8144

© APRIL 2017
ATEEM ENGINEERING
ALL RIGHTS RESERVED

REGISTERED PROFESSIONAL ENGINEER
JOHN M. KIMMEL
NO. 15698
Exp.6-30-2018
ELECTRICAL
STATE OF CALIFORNIA
7/21/2017

City of Santa Rosa
Transportation & Public Works

NO.	DATE	REVISION	BY

SCALE: AS SHOWN
DATE: JULY, 2017
DWN BY: ZKV
CHK BY: SMK

APPROVED: Acting Deputy Director – Engineering
By Andrew Allen Date 8/1/17

CITY OF SANTA ROSA
FARMERS LANE WELL FACILITIES
REHABILITATION

VFD PNL4111 & 4211
ELEVATION, E4

CONTRACT NO.
C01839

SHEET 25 OF 40

FILE NO. 2017-0014

WELL REHABILITATION

Z:\ACADDWG\2015\1509b\DESIGN\1509Be004-D.dwg 7/5/2017 3:51 PM Zak-kad

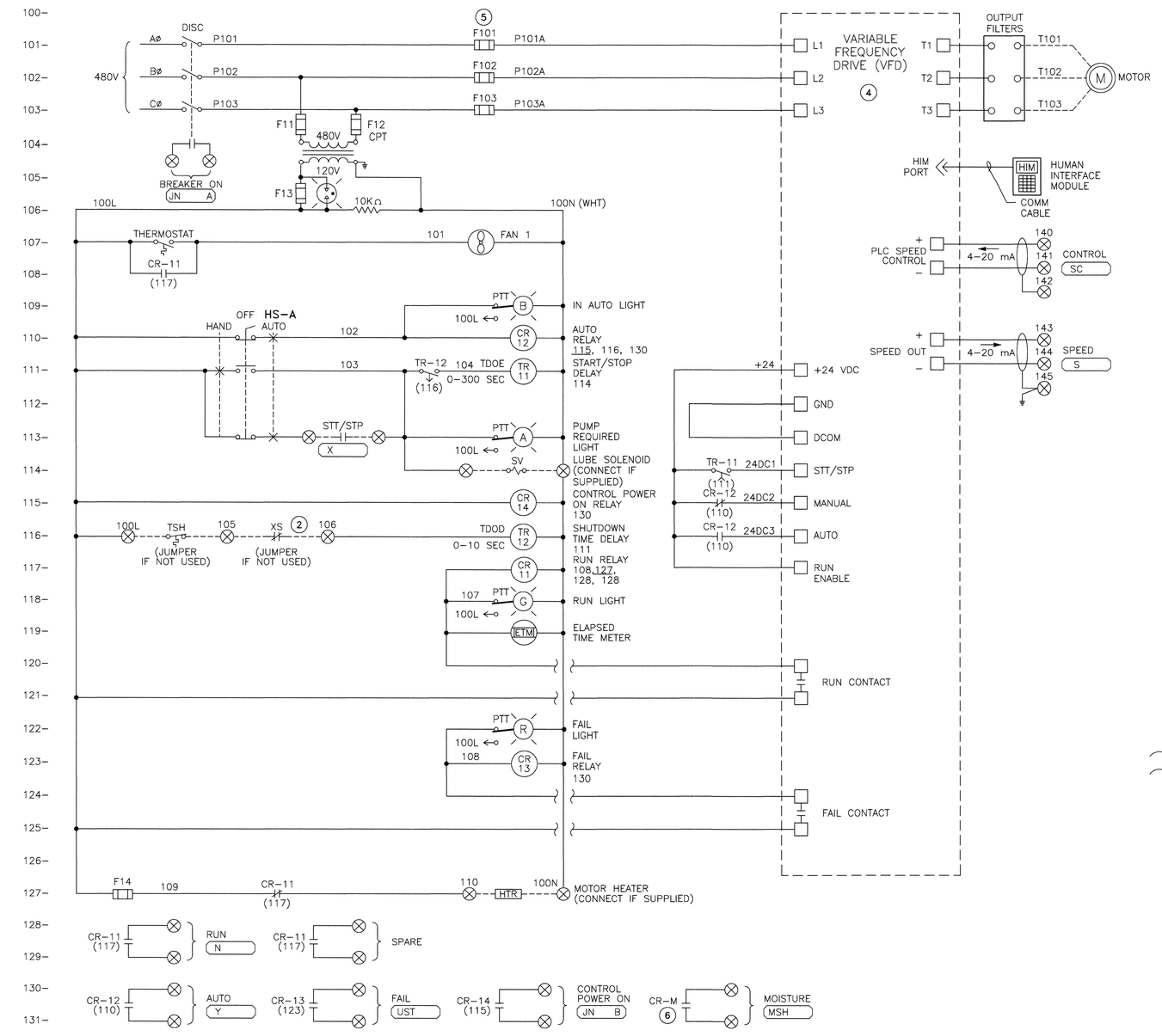

WELL PUMP ELEMENTARY DIAGRAM ① ⑥

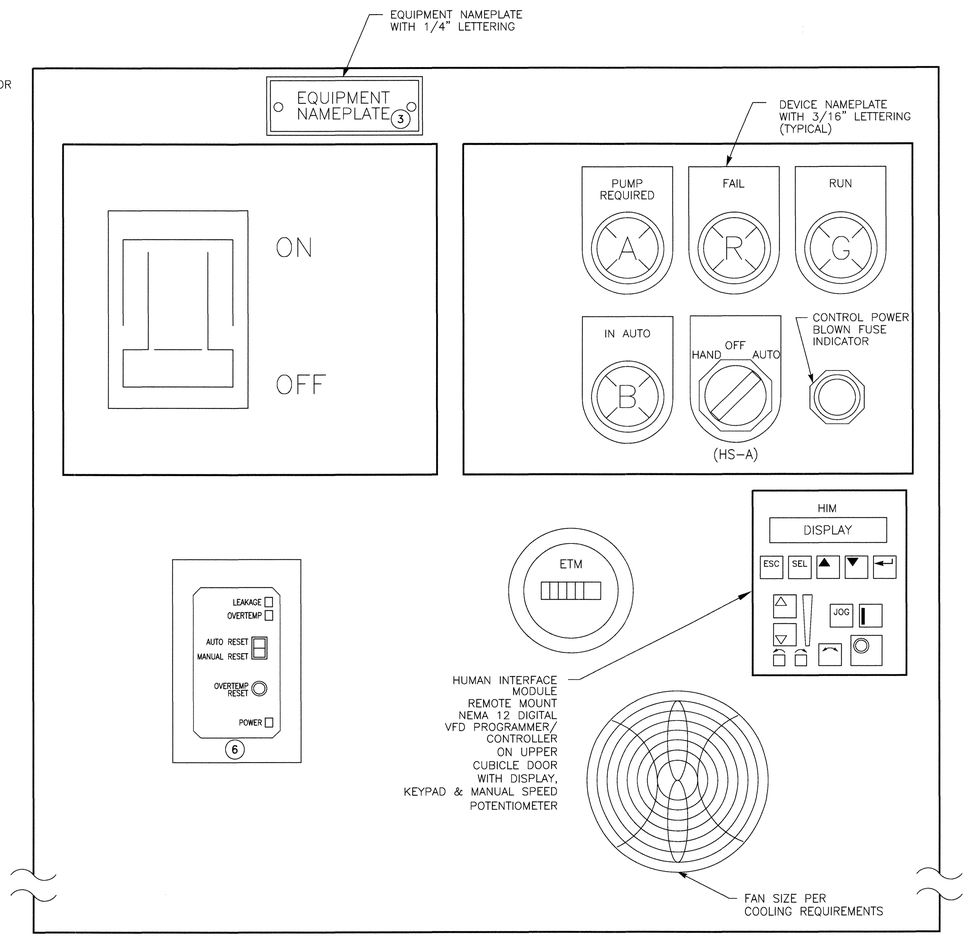

DOOR LAYOUT

NOT TO SCALE

NOTES:

1. USE 100 SERIES WIRES & TERMINAL #s FOR MCC-1, 200 #s FOR MCC-2, ETC.
2. REMOTE SHUTDOWN XS => LSLL, ZSHH, PSHH, ETC., PER P&ID, JUMPER IF NOT USED. THESE ARE TO BE CONTACTS OFF OF AUXILIARY RELAY CONTACTS LOCATED IN MCC CONTROL PANEL DRIVEN FROM FIELD DEVICE.
3. EQUIPMENT NAMEPLATE TO CONTAIN EQUIPMENT DESCRIPTION AND EQUIPMENT NUMBER PER ELEVATION DIAGRAM. MOUNT ON OR ABOVE DEVICE BOX ON FCS.
4. VFD WITH ELECTRONIC OVERLOAD & BUILT-IN LCL LINE FILTER.
5. SIZE FUSES PER MANUFACTURER'S RECOMMENDATIONS.
6. INSTALL MOISTURE RELAY AND ASSOCIATED DEVICES SUPPLIED WITH PUMP WHEN INDICATED ON P&ID.

T.E.E.M.
(916) 457-8144

© APRIL 2017
ATEEM ENGINEERING
ALL RIGHTS RESERVED

Z:\ACADDWG\2015\1509b\DESIGN\1509Be005-D.dwg 7/6/2017 1:27 PM Zak-kad

REGISTERED PROFESSIONAL ENGINEER
NO. 15698
Exp.6-30-2018
ELECTRICAL
STATE OF CALIFORNIA
7/21/2017

City of Santa Rosa
Transportation & Public Works

NO.	DATE	REVISION	BY

DATE: JULY, 2017
CHK BY: SMK
SCALE: AS SHOWN
DWN BY: ZKV
APPROVED: Acting Deputy Director - Engineering
By Andrew Allen Date 8/1/17

CITY OF SANTA ROSA
FARMERS LANE WELL FACILITIES
REHABILITATION

WELL PUMP ELEMENTARY DIAGRAM, E5

CONTRACT NO. C01839
SHEET 26 OF 40
FILE NO. 2017-0014

WELL REHABILITATION

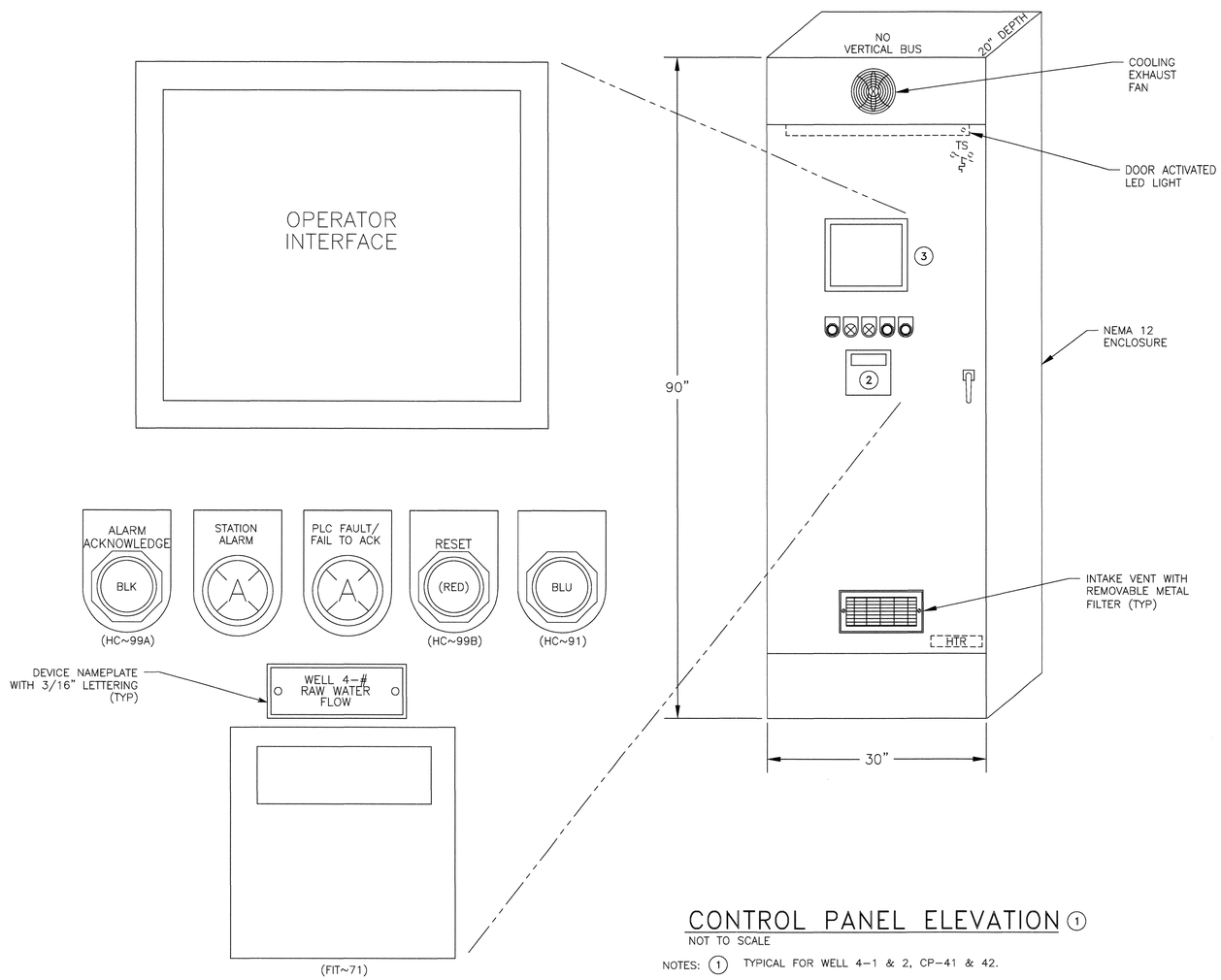

CONTROL PANEL ELEVATION ①

NOT TO SCALE

NOTES:
1. TYPICAL FOR WELL 4-1 & 2, CP-41 & 42.
2. FLOW TRANSMITTER SHALL BE INSTALLED IN METAL RECESS BOX FOR TRANSMITTER TO BE FLUSH WITH PANEL DOOR.
3. TOP OF OI TO BE MAXIMUM 66" ABOVE FINISHED FLOOR.

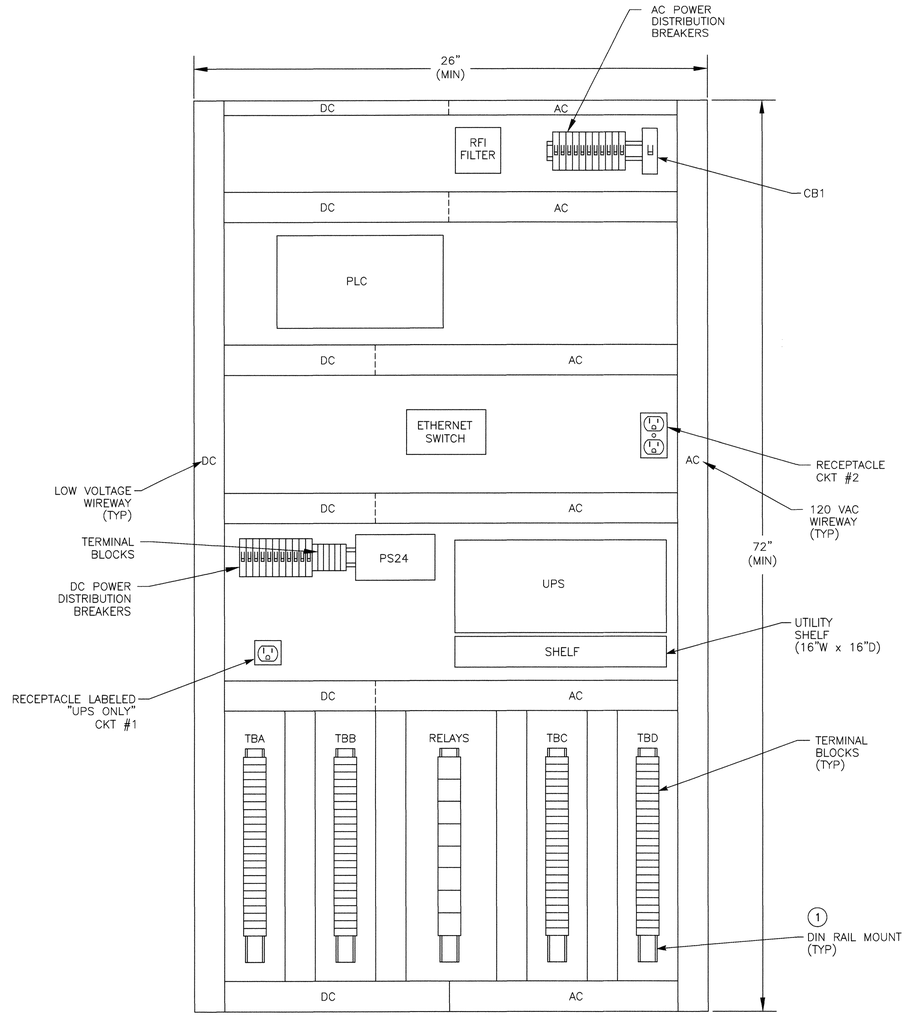

BACKPAN LAYOUT ③

NOT TO SCALE

NOTES:
1. PROVIDE ADDITIONAL DIN RAIL TO ADD A MINIMUM OF EIGHT TERMINAL BLOCKS TO EACH TERMINAL STRIP.
2. PROVIDE SPACE FOR CITY TO INSTALL AUTODIALER. COORDINATE WITH CITY TO PROVIDE DRY CONTACTS AS REQUIRED.
3. INSTALL FIBER PATCH PANEL ON FULL HEIGHT SIDE PAN.

T.E.E.m.
(916) 457-8144

© APRIL 2017
ATEEM ENGINEERING
ALL RIGHTS RESERVED

REGISTERED PROFESSIONAL ENGINEER
JOHN M. KIMMEL
NO. 15698
Exp. 6-30-2018
ELECTRICAL
STATE OF CALIFORNIA
7/21/2017

City of Santa Rosa
Transportation & Public Works

NO.	DATE	REVISION	BY

SCALE: AS SHOWN
DWN BY: ZKV
DATE: JULY, 2017
CHK BY: SMK
APPROVED: Acting Deputy Director - Engineering
By Andrew Allen Date 8/1/17

CITY OF SANTA ROSA
FARMERS LANE WELL FACILITIES
REHABILITATION

CONTROL PANEL ELEVATION & LAYOUT, E6

CONTRACT NO. C01839
SHEET 27 OF 40
FILE NO. 2017-0014

WELL REHABILITATION

Z:\ACADDWG\2015\1509b\DESIGN\1509Be006-D.dwg 7/20/2017 1:54 PM Zak-kad

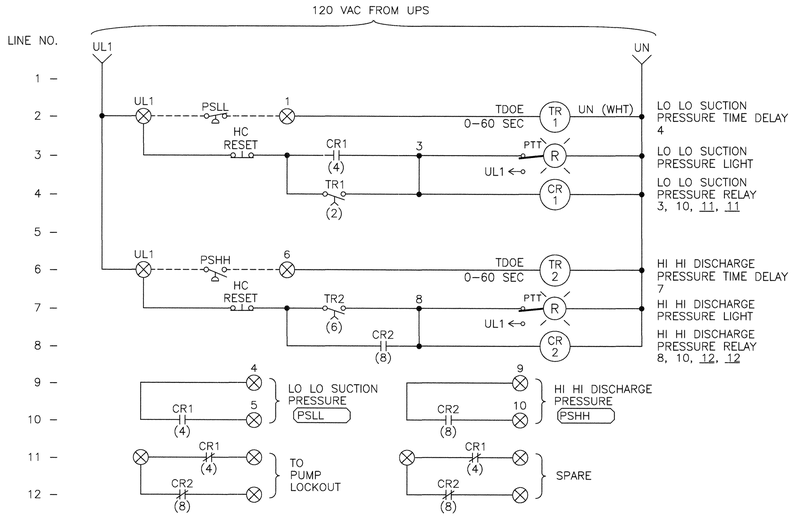

TYPICAL PUMP LOCKOUT ELEMENTARY DIAGRAM (A) (1)

NOTES: (1) PUMP LOCKOUT PER P&ID.

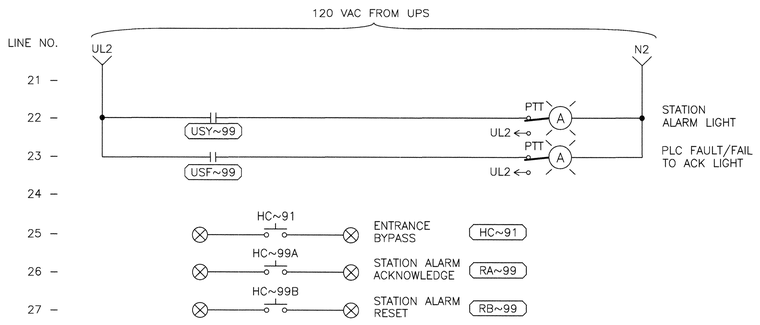

CP ELEMENTARY DIAGRAM (B)

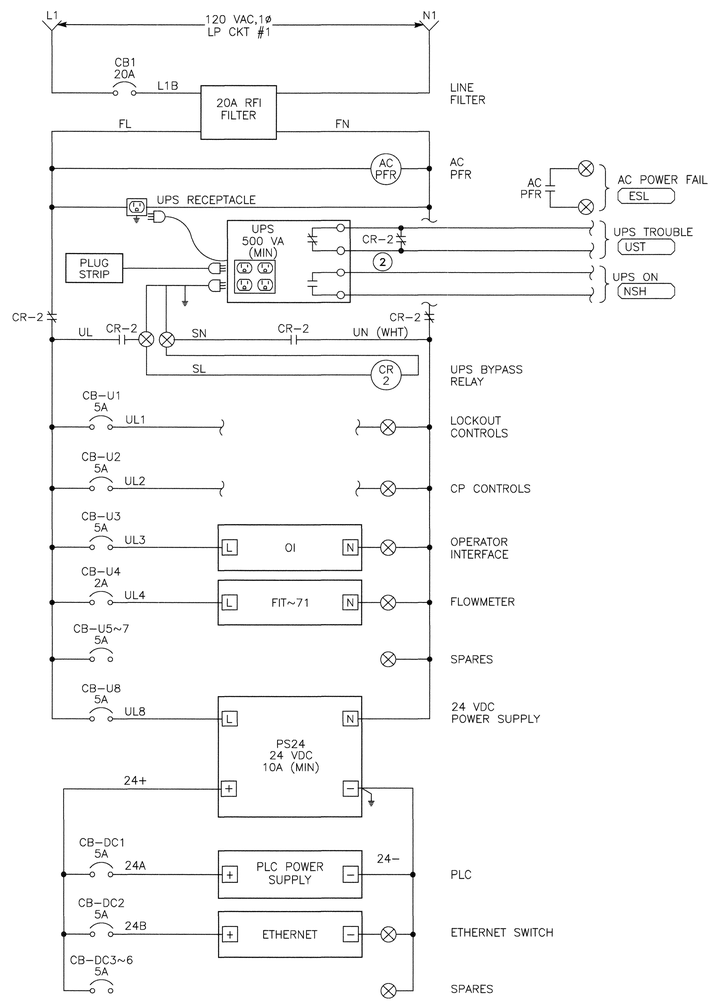

POWER DISTRIBUTION DIAGRAM (C) (1)

NOTES: (1) DISTRIBUTION DIAGRAM REPRESENTATIVE OF MAJOR COMPONENTS ONLY. ADDITIONAL FUSES, CIRCUITS AND COMPONENT CONNECTIONS MAY BE REQUIRED FOR A FUNCTIONAL SYSTEM.

(2) PROVIDE & INSTALL INTERFACE RELAYS IF REQUIRED.

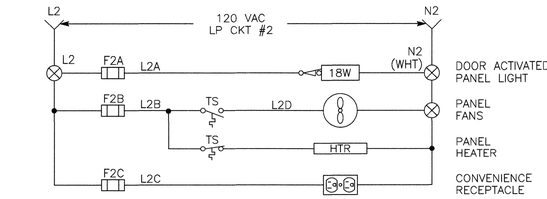

CP UTILITY ELEMENTARY DIAGRAM (D)

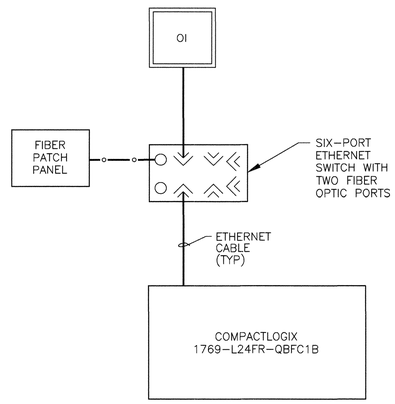

PLC BLOCK DIAGRAM (E)

T.E.E.M.
(916) 457-8144

© APRIL 2017
ATEEM ENGINEERING
ALL RIGHTS RESERVED

Z:\ACADDWG\2015\1509b\DESIGN\1509Be007-D.dwg 7/20/2017 1:51 PM Zak-kad

REGISTERED PROFESSIONAL ENGINEER
JOHN M. KIMMEL
NO. 15698
Exp.6-30-2018
ELECTRICAL
STATE OF CALIFORNIA
7/21/2017

City of Santa Rosa
Transportation & Public Works

NO.	DATE	REVISION	BY

SCALE: AS SHOWN
DATE: JULY, 2017
DWN BY: ZKV
CHK BY: SMK
APPROVED: Acting Deputy Director - Engineering
By Andrew Allen Date 8/1/17

CITY OF SANTA ROSA
FARMERS LANE WELL FACILITIES
REHABILITATION

CONTROL PANEL ELEMENTARY DIAGRAMS, E7

CONTRACT NO. C01839
SHEET 28 OF 40
FILE NO. 2017-0014

WELL REHABILITATION

NOTES:

1. CONDUIT SIZE & TYPE; WIRE FILL FOR CONDUITS TO BE DESIGNATED NEXT TO CONDUIT NUMBER ELLIPSE.
2. THESE ARE THE CONTRACTOR DESIGNATED DRAWING NUMBERS.
3. NOT MORE THAN TWO WIRES PER TERMINAL BLOCK.
4. ALL TERMINAL BLOCKS TO BE PLACED IN NUMERICAL ORDER.
5. ALL NEUTRALS SHALL BE WHITE WIRE COLOR.
6. #12 GND TO DEVICES SHALL BE BONDED TO #8 GND LUG.

REFERENCE DOCUMENTS

DRAWING #	DESCRIPTION	MANUFACTURER
P712	P&ID DIAGRAM	DESIGN
E717	ELECTRICAL SITE PLAN	DESIGN
PAGE 32, 36	CONDUIT AND CABLE SCHEDULE	DESIGN
(2) 1354-11	LOOP DIAGRAM	CONTRACTOR
(2) 1354-68	ELEMENTARY DIAGRAM	CONTRACTOR

TYPICAL CONDUIT MARKING SYSTEM

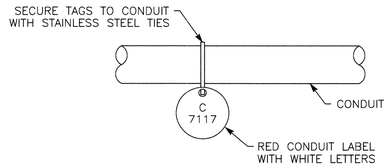

TYPICAL WIRE LABEL

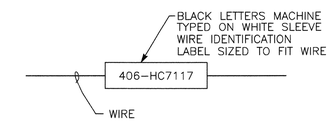

EQUIPMENT

FIELD

MCC-4 SECTION 1 CUBICLE A~E

CONTROL PANEL NO.2

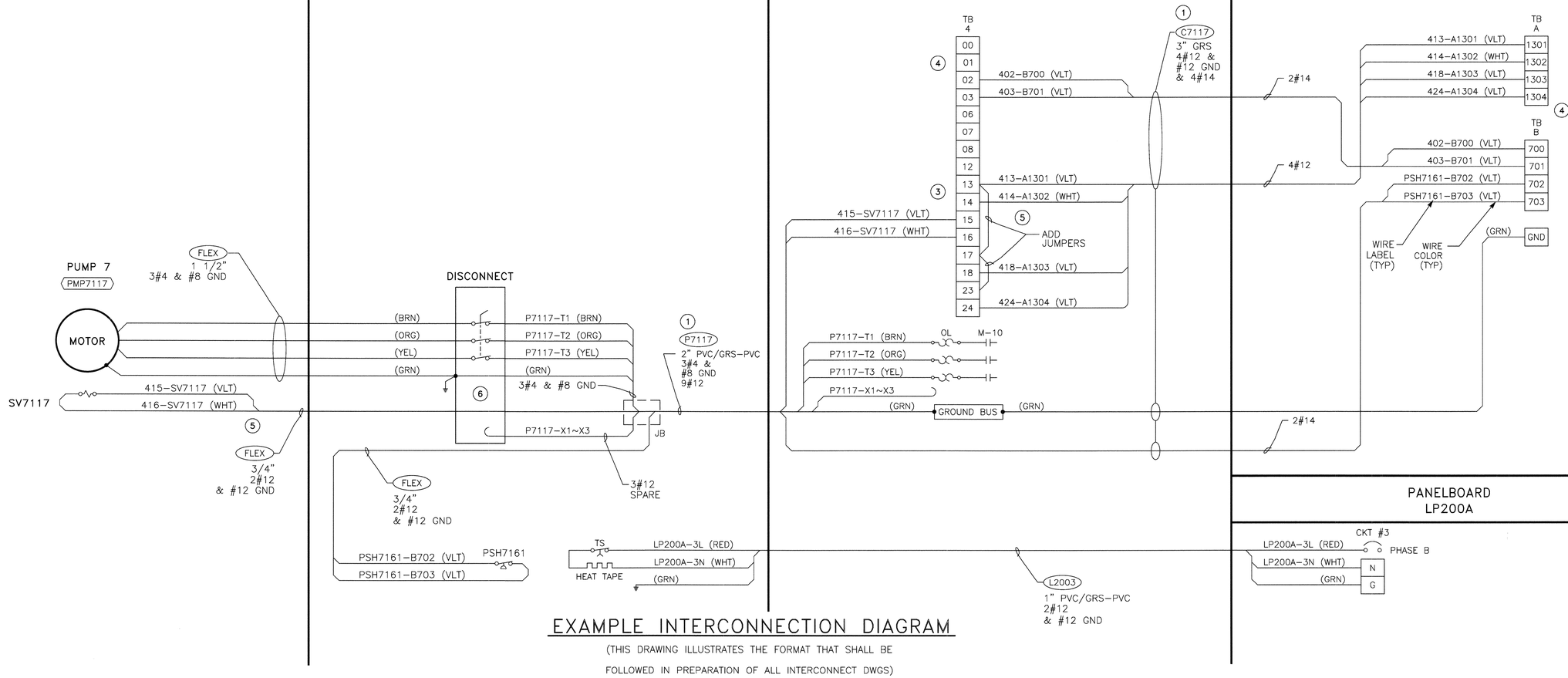

EXAMPLE INTERCONNECTION DIAGRAM

(THIS DRAWING ILLUSTRATES THE FORMAT THAT SHALL BE FOLLOWED IN PREPARATION OF ALL INTERCONNECT DWGS)

T.E.E.M.
(916) 457-8144

© APRIL 2017
ATEEM ENGINEERING
ALL RIGHTS RESERVED

REGISTERED PROFESSIONAL ENGINEER
SHARON M. KIMMEL
NO. 15698
Exp.6-30-2018
ELECTRICAL
STATE OF CALIFORNIA
7/21/2017

City of Santa Rosa
Transportation & Public Works

NO.	DATE	REVISION	BY

SCALE: AS SHOWN
DWN BY: ZKV
DATE: JULY, 2017
CHK BY: SMK
APPROVED: Acting Deputy Director - Engineering
By Andrew Allen Date 8/1/17

CITY OF SANTA ROSA
FARMERS LANE WELL FACILITIES REHABILITATION

EXAMPLE INTERCONNECT DIAGRAM, E10

CONTRACT NO. C01839
SHEET 29 OF 40
FILE NO. 2017-0014

WELL REHABILITATION

Z:\ACADDWG\2015\1509b\DESIGN\1509Be010-D.dwg 5/31/2017 4:32 PM Zak-kad

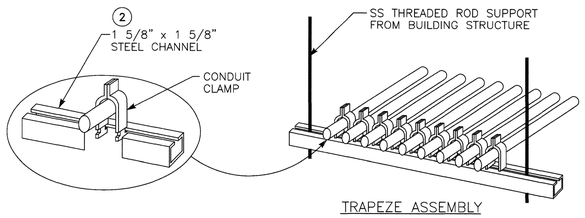

CONDUIT PIPE STRAP MOUNTING DETAIL

NOT TO SCALE — A VAR — (1) (3)

NOTES:
(1) THIS DETAIL TYPICAL FOR BOTH VERTICAL AND HORIZONTAL MOUNTING.
(2) CHANNEL AND ALL SUPPORT DEVICES TO BE RATED PER AREA CLASSIFICATION. FIELD COAT ALL CUTS, ETC. TO MATCH.
(3) CHANNELS TO BE SPACED 5' MAXIMUM.

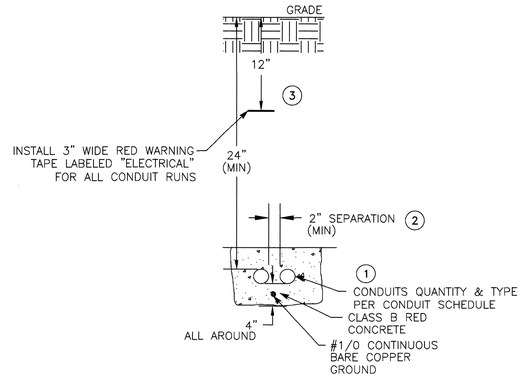

ENCASED CONDUITS DETAIL

NOT TO SCALE — B VAR

NOTES:
(1) PLACE CONDUIT RUNS OF 4 CONDUITS OR GREATER IN PLASTIC SPACERS (RATED FOR DIRECT BURIAL) EVERY 5' ALONG LENGTH OF RUN.
(2) PROVIDE 12" (MIN) SEPARATION BETWEEN "A, C & D" TYPE GROUP AND "E, L & P" TYPE GROUP CONDUITS. PROVIDE 12" SEPARATION OF "H" PREFIXED CONDUITS FROM ALL OTHER NON "H" PREFIXED CONDUITS.
(3) TRENCHING & COMPACTED BACKFILL PER STANDARD SPECIFICATIONS.

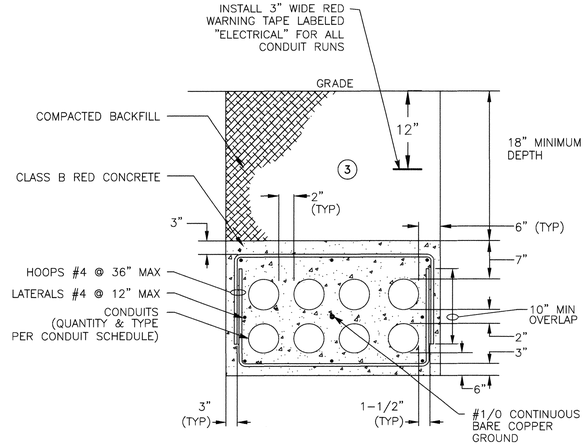

DUCT BANK DETAIL

NOT TO SCALE — C VAR — (2)

NOTES:
(1) PLACE CONDUIT RUNS OF 4 CONDUITS OR GREATER IN PLASTIC SPACERS (RATED FOR DIRECT BURIAL) EVERY 5' ALONG LENGTH OF RUN.
(2) PROVIDE 12" (MIN) SEPARATION BETWEEN "A, C & D" TYPE GROUP AND "E, L & P" TYPE GROUP CONDUITS. PROVIDE 12" SEPARATION OF "H" PREFIXED CONDUITS FROM ALL OTHER NON "H" PREFIXED CONDUITS.
(3) TRENCHING & COMPACTED BACKFILL PER SPECIFICATIONS.

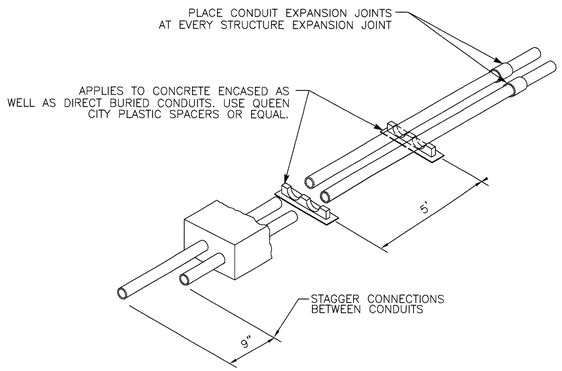

SPACERS AND JOINT INSTALLATION DETAIL

NOT TO SCALE — D VAR

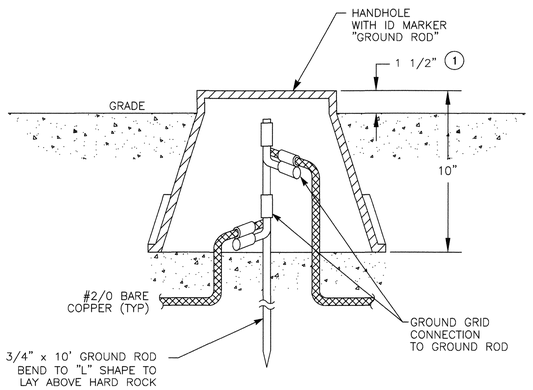

HANDHOLE GROUNDING DETAIL

NOT TO SCALE — E VAR

NOTES: (1) FLUSH IN PAVED AREAS.

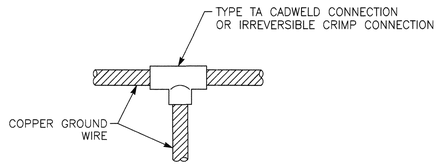

GROUND CABLE CONNECTION DETAIL

NOT TO SCALE — F VAR

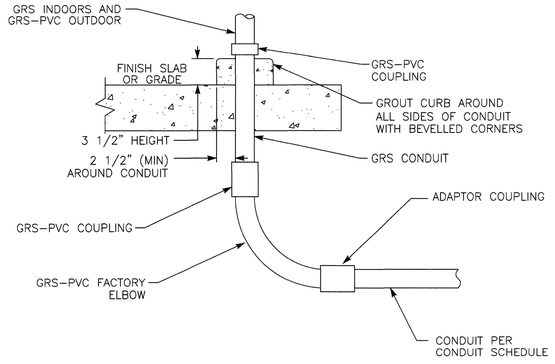

EXPOSED CONDUIT TRANSITION DETAIL

NOT TO SCALE — G VAR

T.E.E.M.
(916) 457-8144

© APRIL 2017
ATEEM ENGINEERING
ALL RIGHTS RESERVED

Z:\ACADDWG\2015\1509b\DESIGN\1509Be011-D.dwg 7/5/2017 4:04 PM Zak-kad

REGISTERED PROFESSIONAL ENGINEER — JOHN M. KIRK — No. 19598 — Exp. 6-30-2018 — ELECTRICAL — STATE OF CALIFORNIA
7/21/2017

City of Santa Rosa
Transportation & Public Works

NO.	DATE	REVISION	BY

DATE: JULY, 2017 — CHK BY: SMK
SCALE: AS SHOWN — DWN BY: ZKV

APPROVED: Acting Deputy Director - Engineering
By Andrew Allen — Date 8/1/17

CITY OF SANTA ROSA
FARMERS LANE WELL FACILITIES
REHABILITATION

TYPICAL ELECTRICAL DETAILS NO.1, E11

CONTRACT NO. C01839
SHEET 30 OF 40
FILE NO. 2017-0014

WELL REHABILITATION

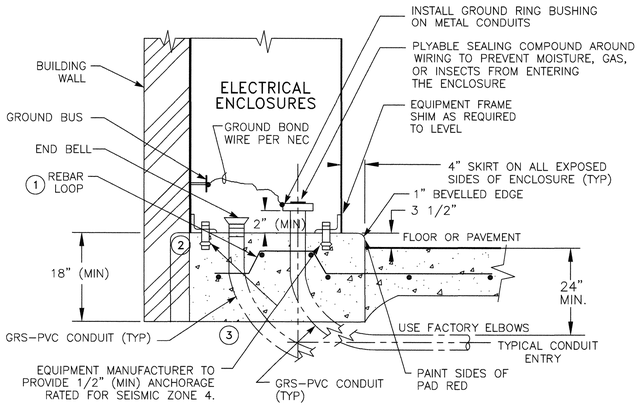

EQUIPMENT CONCRETE PAD DETAIL

NOT TO SCALE — A VAR

NOTES:
1. CONCRETE PAD ABOVE FLOOR TO BE POURED AFTER MAIN PAD HAD BEEN POURED. PAD ABOVE FLOOR TO BE CLASS "A" CONCRETE COMPOSITION ACCURATELY LEVELED WITHIN 1/16 INCH. REBAR TO BE #4 @ 12" CROSSWAYS & VERTICAL EVERY 6" (MINIMUM) OR AS CALLED OUT IN STRUCTURAL DRAWINGS.
2. IF NO BUILDING WALL EXTEND PAD 4" BEYOND ENCLOSURE ON BACK & SIDES.
3. CONCRETE DUCT BANKS SHALL EXTEND & CONNECT INTO EQUIPMENT CONCRETE PAD.

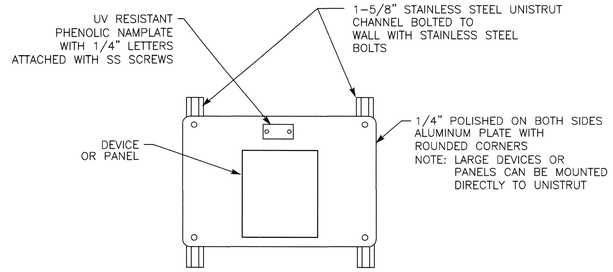

WALL PLATE SUPPORT DETAIL

NOT TO SCALE — B VAR

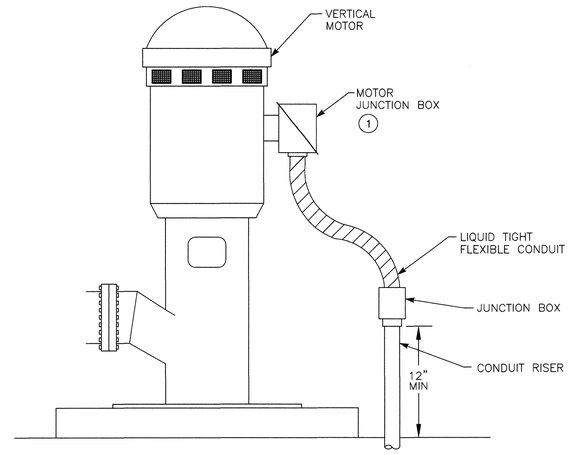

VERTICAL MOTOR CONNECTION DETAIL

NOT TO SCALE — C VAR

NOTES:
1. SIZE MOTOR JUNCTION BOX FOR CONDUITS AND WIRES LISTED IN "CONDUIT & WIRE SCHEDULE".

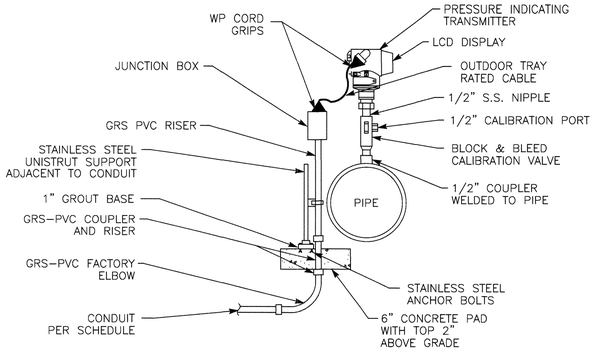

PRESSURE TRANSMITTER DETAIL

NOT TO SCALE — D VAR

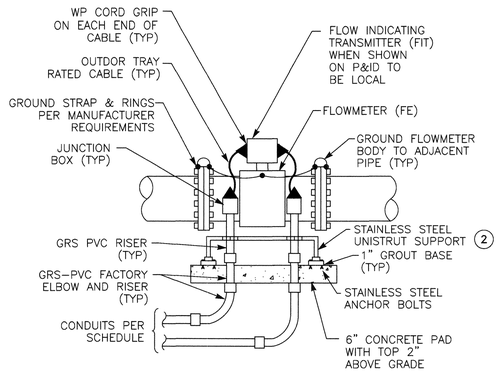

ABOVE GRADE FLOWMETER DETAIL

NOT TO SCALE — E VAR

NOTES:
1. SIMILAR INSTALLATION SHALL BE USED FOR VERTICAL PIPES.
2. SUPPORT WITH TWO HOLE BASE ON EACH SIDE AND HEIGHT OF HORIZONTAL UNISTRUT SUPPORT TO BE 12" MINIMUM.

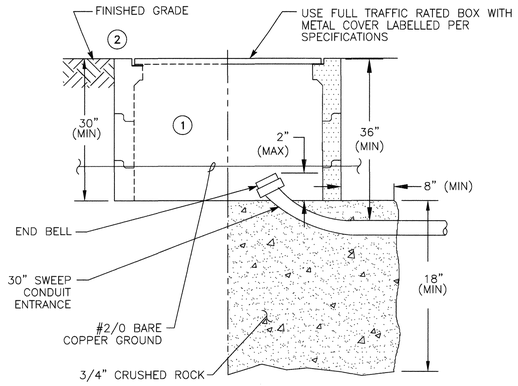

PULL BOX DETAIL

NOT TO SCALE — F VAR

NOTES:
1. TRAFFIC RATED CHRISTY "B" SERIES OR EQUAL, MINIMUM BOX SIZE PER PLANS. PROVIDE LARGER AT NO ADDTIONAL COST TO OWNER.
2. ADD EXTENSIONS WHERE NECESSARY TO RAISE COVER TO FINISHED GRADE.
3. GROUND COVER FRAME, COVER AND OTHER EXPOSED METAL PARTS TO #2/0 BARE COPPER GROUND CABLE.

T.E.E.M.
(916) 457-8144

© APRIL 2017
ATEEM ENGINEERING
ALL RIGHTS RESERVED

Z:\ACADDWG\2015\1509b\DESIGN\1509Be012-D.dwg 5/31/2017 4:28 PM Zak-kad

REGISTERED PROFESSIONAL ENGINEER — JOHN M. KUNZ — NO. 15698 — Exp 6-30-2018 — ELECTRICAL — STATE OF CALIFORNIA

7/21/2017

City of Santa Rosa
Transportation & Public Works

NO.	DATE	REVISION	BY

DATE: JULY, 2017
CHK BY: SMK
SCALE: AS SHOWN
DWN BY: ZKV

APPROVED: Acting Deputy Director – Engineering
By Andrew Allen
Date 8/1/17

CITY OF SANTA ROSA
FARMERS LANE WELL FACILITIES REHABILITATION

TYPICAL ELECTRICAL DETAILS NO.2, E12

CONTRACT NO. C01839
SHEET 31 OF 40
FILE NO. 2017-0014

WELL REHABILITATION

GENERAL NOTES THAT APPLY TO LIGHTING AND RECEPTACLE PLAN

1. PROVIDE AND INSTALL NECESSARY WIRES IN SURFACE MOUNT 3/4" (MIN) EMT CONDUIT FOR LIGHTING AND RECEPTACLE ARRANGEMENT AS SHOWN IN NEMA 12 AREAS. IN NEMA 4X AREAS USE GRS-PVC CONDUITS. IF CONDUITS ARE ROUTED UNDERGROUND, THE UNDERGROUND SECTION AND CONCEALED RISER TO FIRST DEVICE BOX MAY BE PVC-40.
2. DEVICE BOXES AND CONDUIT BODIES SHALL BE METALLIC. IN NEMA 4X AREAS USE SS OR PVC COATED BOXES.
3. CONDUCTORS SHALL BE COPPER TYPE THHN, #12 AWG (MINIMUM).
4. MOUNT INDIVIDUAL CONDUITS USING SINGLE BOLT SS PIPE STRAPS AND CLAMP BACK SPACERS.
5. USE SS EXPANSION WEDGE ANCHORS OR EPOXY ANCHORS AS NECESSARY FOR EQUIPMENT MOUNTING.
6. PROVIDE AND INSTALL FIXTURES PER SCHEDULE THIS PAGE, QUANTITY AS SHOWN ON THE DRAWINGS.
7. PROVIDE AND INSTALL ALL DEVICE BOXES, JUNCTION BOXES, RECEPTACLES, SWITCHES, AND COVERS.
8. DEVICES TO BE GROUND FAULT INTERRUPTER (GFI) TYPE AND WEATHERPROOF (WP) WHERE SHOWN.
9. SEE ELECTRICAL SYMBOLS AND ABBREVIATIONS DRAWING FOR SYMBOL DEFINITION.
10. ALL WORK SHALL CONFORM TO LOCAL CODES AND 2014 NATIONAL ELECTRIC CODE.
11. PAINT CONDUITS TO MATCH COLOR OF SURFACE ATTACHED TO.

LIGHTING AND FIXTURE SCHEDULE

CODE LETTER	FIXTURE TYPE	FINISH	FIXTURE LAMPS	WATTS/ FIXTURE	MANUFACTURER OR APPROVED EQUAL	MOUNTING ARRANGEMENT	NOTES
A	LED LUMINAIRE, 4 FT, CODE-GAUGE STEEL LINEAR-FACETED REFRACTOR W/LIGHT DIFFUSING FILM DESIGNLIGHTS CONSORTIUM QUALIFIED	WHITE	LED 4000 K 82 CRI 120 VAC	50	LITHONIA STL4-48L-D50-LP840	CHAIN HANGER SET 10 FT FROM FLOOR	UL LISTED FOR DAMP LOCATIONS 84 LUMENS
B	SECURITY LIGHT, SCONCE DIE-CAST ALUMINUM POWDER COAT FINISH NIGHTIME FRIENDLY PRODUCT DESIGNLIGHTS CONSORTIUM QUALIFIED	DARK BRONZE	LED 4000K 1 EACH 120 VAC	24	LITHONIA WSQ-1-10A700/40K-SR2-120-DDBXD WTM	WALL MOUNT ON BUILDING AT 11 FT	U.L. LISTED FOR WET LOCATIONS TYPE II DISTRIBUTION
E	EMERGENCY LIGHTING IMPACT RESISTANT CONTEMPORARY HOUSING REGULATED CHARGER	GRAY	3W LED 2 EACH 12 V	3	LITHONIA QUANTUM LED SERIES ELM2	WALL MOUNTED AT 8' TO BOTTOM OF FIXTURE	SEALED LEAD CALCIUM BATTERY TEST SWITCH UL LISTED FOR DAMP ENVIRONMENT
X	EXIT LIGHTING WITH NICAD BATTERY ALUMINUM HOUSING, 90 MIN MERGENCY POWER RED LETTERS	WHITE	LED TYPE 120 VAC	0.6	LITHONIA LQC-W-1-R-EL-N	UNIVERSAL MOUNT	UL LISTED FOR DAMP ENVIRONMENT TEST SWITCH, STATUS INDICATOR

DWG REF: E2 | MOUNTING: SURFACE | VOLTS: 120 / 240 | BUS AMPS: 100A | ENTRY: BOTTOM
NAMEPLATE: LP-41 | PHASE: 1 | MAIN BKR: 30A | NEMA: 12
LOCATION: WELL 4-1 BUILDING | WIRE: 3 | KAIC RATING: 10 | SPD: YES

BKR NO.	LOAD DESCRIPTION	LOAD VA	LINE AMPS		BKR AMP/ POLE	BKR NO.	PHASE	BKR NO.	BKR AMP/ POLE	LINE AMPS		LOAD VA	LOAD DESCRIPTION	BKR NO.
1	CP-41 UPS	500	4		20/1	1	A	2	20/1	2		200	CP-42 AUXILIARY	2
3	LIGHTS-BUILDING	100		1	20/1	3	B	4	20/1(G)		5	540	RECEPT-BUILDING	4
5	SPARE	0	0		20/1	5	A	6	20/1	0		0	SPARE	6
7	SPARE	0		0	20/1	7	B	8	20/1		0	0	SPARE	8
9	AC UNIT	924	8		20/2	9	A	10	20/1	0		0	SPARE	10
11		924		8	(L)	11	B	12	20/1		0	0	SPARE	12
13	SPARE	0	0		20/2	13	A	14	30/2	0			MAIN BREAKER	14
15		0		0	(L)	15	B	16			0			16

PHASE	A	B			A	B	PHASE
LEFT SIDE AMPS	12	9			2	5	RIGHT SIDE AMPS
LEFT SIDE KVA	1.42	1.02	NEUTRAL		0.20	0.54	RIGHT SIDE KVA
					1.42	1.02	LEFT SIDE KVA
TOTAL KVA	3.19		GROUND		1.62	1.56	TOTAL PHASE KVA
TOTAL AMPS @ 240V, 1P	13.3				14	13	TOTAL PHASE AMPS
DIVERSITY FACTOR	0.90				102	98	% OF AVERAGE
LOAD KVA	2.87						

NOTES: 1. MEANS OF WIRE COLOR CODING SHALL BE POSTED ON PANELBOARD PER NEC 210.5
2. (G) INDICATES GFI BREAKER REQUIRED WITH 30 MA SENSITIVITY
3. (H) INDICATES HACR RATED BREAKER.
4. (L) PROVIDE PADLOCKING PROVISION IN ORDER TO LOCK BREAKER IN THE OFF POSITION.

DWG REF: E2 | MOUNTING: SURFACE | VOLTS: 120 / 240 | BUS AMPS: 100A | ENTRY: BOTTOM
NAMEPLATE: LP-42 | PHASE: 1 | MAIN BKR: 100A | NEMA: 12
LOCATION: WELL 4-2 BUILDING | WIRE: 3 | KAIC RATING: 10 | SPD: YES

BKR NO.	LOAD DESCRIPTION	LOAD VA	LINE AMPS		BKR AMP/ POLE	BKR NO.	PHASE	BKR NO.	BKR AMP/ POLE	LINE AMPS		LOAD VA	LOAD DESCRIPTION	BKR NO.
1	CP-42 UPS	500	4		20/1	1	A	2	20/1	2		200	CP-42 AUXILIARY	2
3	LIGHTS-BUILDING	100		1	20/1	3	B	4	20/1(G)		5	540	RECEPT-BUILDING	4
5	SPARE	0	0		20/1	5	A	6	20/1	0		0	SPARE	6
7	SPARE	0		0	20/1	7	B	8	20/1		0	0	SPARE	8
9	AC UNIT	924	8		20/2	9	A	10	20/1	0		0	SPARE	10
11		924		8	(L)	11	B	12	20/1		3	300	MMS LIGHT/HTR/RECEPT	12
13	LP-41 FEEDER BREAKER	1,624	14		30/2	13	A	14	100/2	0		0	MAIN BREAKER	14
15		1,564		13	(L)	15	B	16			0			16

PHASE	A	B			A	B	PHASE
LEFT SIDE AMPS	25	22			2	7	RIGHT SIDE AMPS
LEFT SIDE KVA	3.05	2.59	NEUTRAL		0.20	0.84	RIGHT SIDE KVA
					3.05	2.59	LEFT SIDE KVA
TOTAL KVA	6.68		GROUND		3.25	3.43	TOTAL PHASE KVA
TOTAL AMPS @ 240V, 1P	27.8				27	29	TOTAL PHASE AMPS
DIVERSITY FACTOR	0.90				97	103	% OF AVERAGE
LOAD KVA	6.01						

NOTES: 1. MEANS OF WIRE COLOR CODING SHALL BE POSTED ON PANELBOARD PER NEC 210.5
2. (G) INDICATES GFI BREAKER REQUIRED WITH 30 MA SENSITIVITY
3. (H) INDICATES HACR RATED BREAKER.
4. (L) PROVIDE PADLOCKING PROVISION IN ORDER TO LOCK BREAKER IN THE OFF POSITION.

T.E.E.M.
(916) 457-8144
© APRIL 2017
ATEEM ENGINEERING
ALL RIGHTS RESERVED

REGISTERED PROFESSIONAL ENGINEER — STEVEN M. KIMMICH — No. 19398 — Exp 6-30-2018 — ELECTRICAL — STATE OF CALIFORNIA
7/21/2017

City of Santa Rosa
Transportation & Public Works

NO.	DATE	REVISION	BY

DATE: JULY, 2017 | CHK BY: SMK
SCALE: AS SHOWN | DWN BY: ZKV
APPROVED: Acting Deputy Director – Engineering
By Andrew Allen Date 8/17

CITY OF SANTA ROSA
FARMERS LANE WELL FACILITIES
REHABILITATION

PANELBOARDS, LIGHTING SCHEDULE & GENERAL NOTES, E30

CONTRACT NO. C01839
SHEET 32 OF 40
FILE NO. 2017-0014

WELL REHABILITATION

Z:\ACADDWG\2015\1509b\DESIGN\1509Be030-D.dwg 7/6/2017 1:16 PM Zak-kad

CONDUIT & WIRE ROUTING SCHEDULE

REF DWG	CONDUIT NO.	FROM	TO	QTY	SIZE	TYPE	PWR QTY	PWR SIZE	GND SIZE	CONTROL QTY	CONTROL SIZE	SIGNAL QTY	SIGNAL SIZE	NOTES
E41	A 4111 A	CP-41	PNL4111	1	1-1/2"	GRS-PVC	-	-	#12	-	-	3	#16 TSPR	
E41	A 4151 A	CP-41	LT4151	1	1"	GRS-PVC	-	-	-	-	-		MNFR CBL	
E41	A 4161 A	CP-41	PIT4161	1	1"	GRS-PVC	-	-	#12	-	-	1	#16 TSPR	
E41	A 4171 A	CP-41	FE4171	1	1"	GRS-PVC	-	-	#8	-	-		MNFR CBL	
E42	A 4211 A	CP-42	PNL4211	1	1-1/2"	GRS-PVC	-	-	#12	-	-	3	#16 TSPR	
E42	A 4251 A	CP-42	LT4251	1	1"	GRS-PVC	-	-	-	-	-		MNFR CBL	
E42	A 4261 A	CP-42	PIT4261	1	1"	GRS-PVC	-	-	#12	-	-	1	#16 TSPR	
E42	A 4271 A	CP-42	FE4271	1	1"	GRS-PVC	-	-	#8	-	-		MNFR CBL	
E41	C 4111 A	CP-41	PNL4111	1	1"	PVC-40	-	-	#12	16	#14	-	-	
E41	C 4191 A	CP-41	ZS4191A	1	3/4"	GRS	-	-	#12	4	#14	-	-	
E42	C 4201 A	CP-42	MMS	1	1"	PVC-40	2	#12	#12	4	#14	-	-	
E42	C 4211 A	CP-42	PNL4211	1	1"	PVC-40	-	-	#12	16	#14	-	-	2#14 CONT From FSL4211
E42	C 4211 B	PNL4211	W4-2	1	1"	PVC-40	-	-	#12	6	#14	-	-	
E42	C 4211 C	PNL4211	SV/FSL4211	1	1"	PVC-40	-	-	#12	6	#14	-	-	
E42	C 4291 A	CP-42	ZS4291A	1	3/4"	GRS	-	-	#12	4	#14	-	-	
E50	D 4100 A	(E)WTP PLC PANEL	BLDG JB	1	2"	GRS	-	-	#12	-	-	1	2 PR FIBER	
E50	D 4100 B	BLDG JB	(E)WTP IPB	1	2"	EXISTING	-	-	#12	-	-	1	2 PR FIBER	Relabel COND
E50	D 4100 C	(E)WTP IPB	(E)WELL IPB	1	2"	GRS-PVC	-	-	#12	-	-	1	2 PR FIBER	
E40	D 4100 D	(E)WELL IPB	(E)WELL 4-1 IPB	1	2"	EXISTING	-	-	#12	-	-	1	2 PR FIBER	Relabel COND
E41	D 4100 E	(E)WELL 4-1 IPB	CP-41	1	2"	GRS-PVC	-	-	#12	-	-	1	2 PR FIBER	
E41	D 4200 A	CP-41	(E)WELL 4-1 IPB	1	2"	GRS-PVC	-	-	#12	-	-	1	2 PR FIBER	
E40	D 4200 B	(E)WELL 4-1 IPB	(E)WELL 4-2 IPB	1	2"	EXISTING	-	-	#12	-	-	1	2 PR FIBER	Relabel COND
E42	D 4200 C	(E)WELL 4-2 IPB	CP-42	1	2"	GRS-PVC	-	-	#12	-	-	1	2 PR FIBER	
E42	D 4201 A	CP-42	MMS	1	1"	GRS-PVC	-	-	#12	-	-	1	4 PR UGCAT6	
E42	H 4000	UTILITY SERVICE	UTILITY XFMR PRI	1	4"	PVC-80	-	-	-	-	-	-	-	PULL TAPE
E41	L 4101 A	LP-41	CP-41	1	1"	PVC-40	4	#12	#12	-	-	-	-	
E42	L 4201 A	LP-42	CP-42	1	1"	PVC-40	4	#12	#12	-	-	-	-	
E42	L 4212 A	LP-42	MMS	1	1"	PVC-40	2	#10	#10	-	-	-	-	
E42	L 4215 A	LP-42	WELL 4-2 PB	1	1-1/2"	PVC-40	3	#6	#8	-	-	-	-	CONT To P4111A2
E41	L 4215 B	WELL 4-1 PB	LP-41	1	1-1/2"	PVC-40	3	#6	#8	-	-	-	-	CONT From P4111A2
E42	P 4000 A	UTILITY XFMR SEC	MMS	2	5"	PVC-80	-	-	-	-	-	-	-	PULL TAPE
E42	P 4111 A1	MMS	WELL 4-2 PB	1	4"	PVC-40	3	#350 kcmil	#1	-	-	-	-	
E40	P 4111 A2	WELL 4-2 PB	WELL4-1 PB	1	4"	EXISTING	3	#350 kcmil	#1	-	-	-	-	+3#6+#8GND, Relabel COND
E41	P 4111 A3	WELL 4-1 PB	PNL4111	1	4"	PVC-40	3	#350 kcmil	#1	-	-	-	-	
E41	P 4111 B	PNL4111	W4-1	1	4"	PVC-40	1	MNFR CBL	-	-	-	-	-	
E42	P 4201 A	MMS	XFMR-LP PRI	1	1-1/2"	PVC-40	2	#3	#4	-	-	-	-	
E42	P 4201 B	XFMR-LP SEC	LP-42	1	2"	PVC-40	3	#1/0	#3	-	-	-	-	
E42	P 4211 A	MMS	PNL4211	1	4"	PVC-40	3	#500 kcmil	#1/0	-	-	-	-	
E42	P 4211 B	PNL4211	W4-2	1	4"	PVC-40	3	#500 kcmil	#1/0	-	-	-	-	VFD RATED CABLE
E41	XC 4161	CP-41	PIT4161 JB	1	1"	PVC-40	-	-	-	-	-	-	-	PULL ROPE
E42	XC 4261	CP-42	PIT4261 JB	1	1"	PVC-40	-	-	-	-	-	-	-	PULL ROPE
E50	XD 4100	(E)WTP IPB	(E)WELL IPB	1	2"	GRS-PVC	-	-	-	-	-	-	-	PULL ROPE
E41	XL 4101	LP-41	(E)WELL 4-1 IPB	1	1-1/2"	PVC-40	-	-	-	-	-	-	-	PULL ROPE
E42	XL 4201	LP-42	(E)WELL 4-2 IPB	1	1-1/2"	PVC-40	-	-	-	-	-	-	-	PULL ROPE

NEMA 4X AREA

30 0 30 60

SCALE IN FEET
1" = 30 Ft.

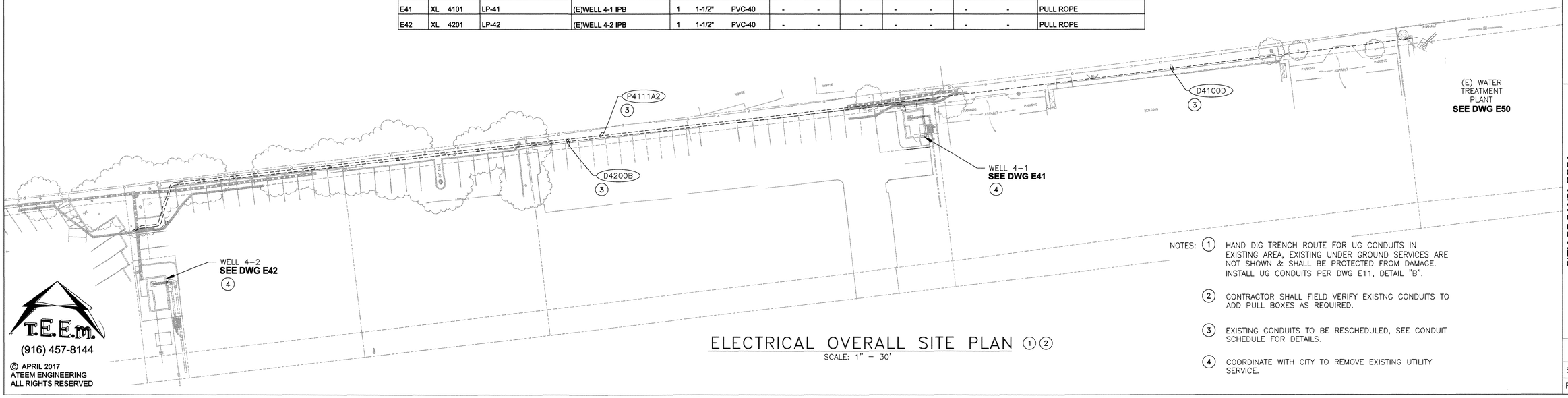

ELECTRICAL OVERALL SITE PLAN ①②

SCALE: 1" = 30'

NOTES:
1. HAND DIG TRENCH ROUTE FOR UG CONDUITS IN EXISTING AREA, EXISTING UNDER GROUND SERVICES ARE NOT SHOWN & SHALL BE PROTECTED FROM DAMAGE. INSTALL UG CONDUITS PER DWG E11, DETAIL "B".
2. CONTRACTOR SHALL FIELD VERIFY EXISTNG CONDUITS TO ADD PULL BOXES AS REQUIRED.
3. EXISTING CONDUITS TO BE RESCHEDULED, SEE CONDUIT SCHEDULE FOR DETAILS.
4. COORDINATE WITH CITY TO REMOVE EXISTING UTILITY SERVICE.

T.E.E.M.
(916) 457-8144

© APRIL 2017
ATEEM ENGINEERING
ALL RIGHTS RESERVED

REGISTERED PROFESSIONAL ENGINEER — JOHN M. KING — No. 13598 — Exp. 6-30-2018 — ELECTRICAL — STATE OF CALIFORNIA
7/21/2017

City of Santa Rosa
Transportation & Public Works

NO.	DATE	REVISION	BY

DATE: JULY, 2017 — CHK BY: SMK
SCALE: AS SHOWN — DWN BY: ZKV
APPROVED: Assistant Deputy Director – Engineering
By _____ Andrew Allen Date 7/21/17

CITY OF SANTA ROSA
FARMERS LANE WELL FACILITIES REHABILITATION

ELECTRICAL OVERALL SITE PLAN, E40

CONTRACT NO. C01839
SHEET 33 OF 40
FILE NO. 2017-0014

WELL REHABILITATION

Z:\ACADDWG\2015\1509b\DESIGN\1509Be040-D.dwg 7/20/2017 1:56 PM Zak-kad

N

NEMA 4X AREA

OUTSIDE BUILDING

NEMA 12 AREA

INSIDE BUILDING

2 0 2 4

SCALE IN FEET
1" = 2 Ft.

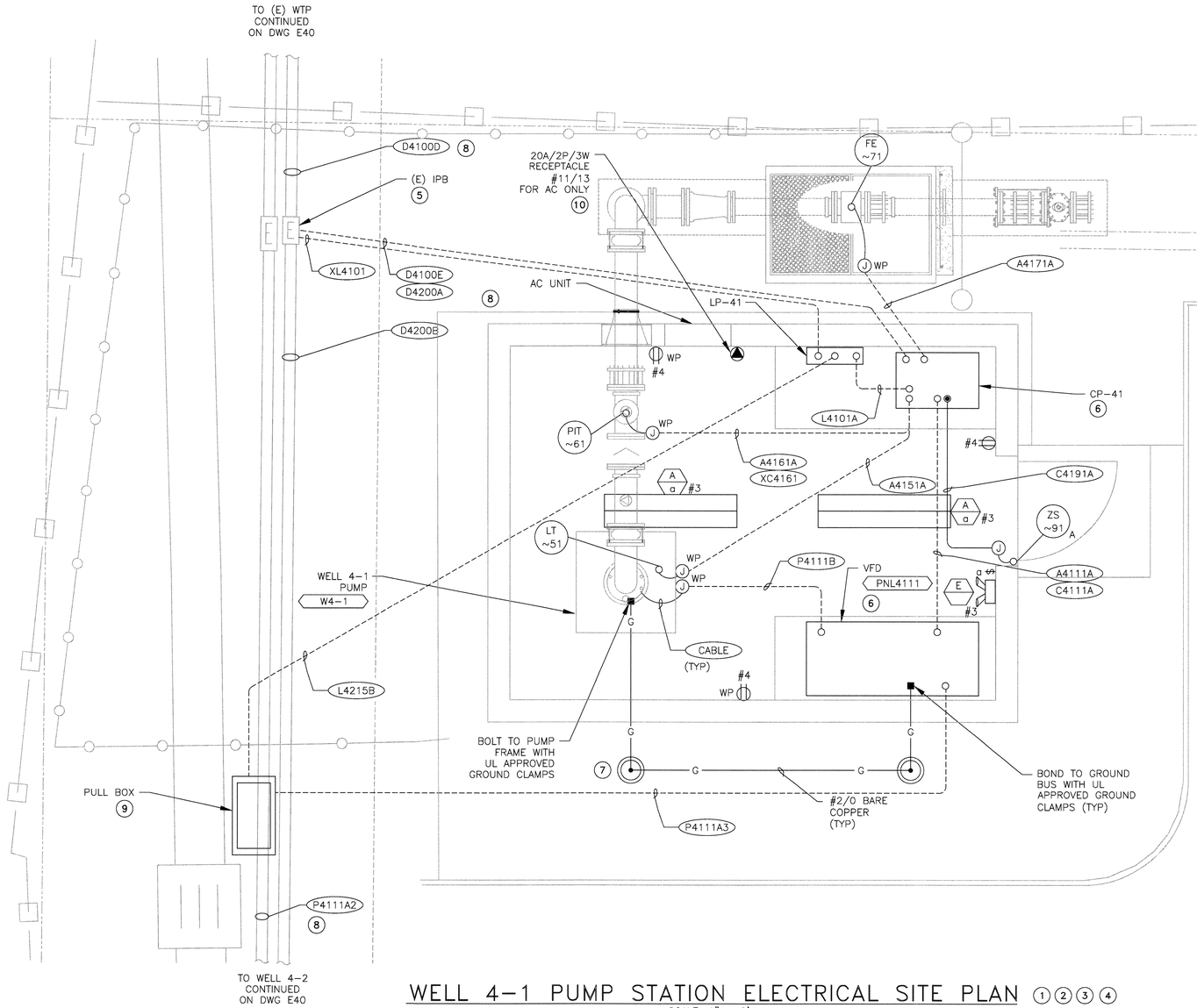

WELL 4-1 PUMP STATION ELECTRICAL SITE PLAN ①②③④

SCALE: 1" = 2'

AREA PREFIX 41~

NOTES:

1. UNDERGROUND CONDUITS PER DWG E11, DETAIL "B".
2. EXPOSED CONDUIT TRANSITIONS PER DWG E11, DETAIL "G".
3. EXPOSED CONDUITS PER DWG E11, DETAIL "A".
4. SEE DWG E30 FOR CONDUIT & WIRE INSTALLATION REQUIREMENTS & FIXTURE SCHEDULE. CIRCUITS SHOWN ARE FED FROM PANEL LP-41.
5. ROUTE NEW CONDUITS TO EXISTING PULL BOX.
6. HOUSEKEEPING CONCRETE PAD PER DWG E12, DETAIL "A".
7. GROUND BONDS TO CONSIST OF #2/0 BARE COPPER WITH 30" MINIMUM COVER, INSTALL GROUND ROD HANDHOLE PER DWG E11, DETAIL "E".
8. EXISTING CONDUITS TO BE RESCHEDULED, SEE CONDUIT SCHEDULE FOR DETAILS.
9. INSTALL MINIMUM 17" X 30" PULL BOX PER DWG E12, DETAIL "F" TO INTERCEPT EXISTING CONDUIT.
10. MOUNT RECEPTACLE 5' ABOVE FLOOR.

T.E.E.m.
(916) 457-8144

© APRIL 2017
ATEEM ENGINEERING
ALL RIGHTS RESERVED

Z:\ACADDWG\2015\1509b\DESIGN\1509Be041-D.dwg 7/20/2017 1:58 PM Zak-kad

REGISTERED PROFESSIONAL ENGINEER
KEVIN M. KING
No. 15698
Exp.6-30-2018
ELECTRICAL
STATE OF CALIFORNIA
7/21/2017

City of Santa Rosa
Transportation & Public Works

NO.	DATE	REVISION	BY

SCALE: AS SHOWN
DWN BY: ZKV
DATE: JULY, 2017
CHK BY: SMK

APPROVED: Acting Deputy Director – Engineering
By Andrew Allen Date 6/1/17

CITY OF SANTA ROSA
FARMERS LANE WELL FACILITIES
REHABILITATION

WELL 4-1 ELECTRICAL SITE PLAN, E41

CONTRACT NO. C01839
SHEET 34 OF 40
FILE NO. 2017-0014

WELL REHABILITATION

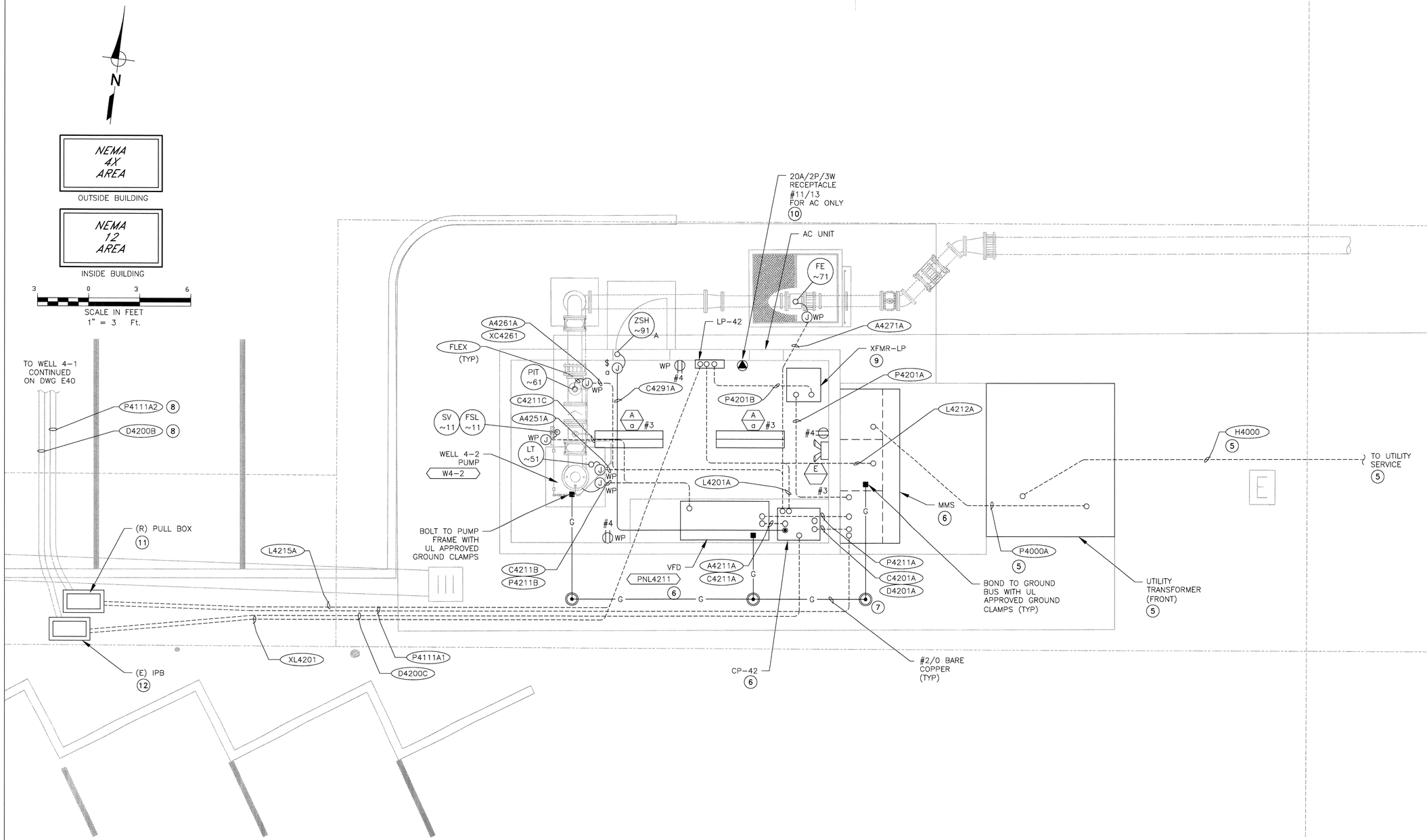

WELL 4-2 PUMP STATION ELECTRICAL SITE PLAN (1)(2)(3)(4)

SCALE: 1" = 3'

AREA PREFIX 42~

NOTES:

(1) UNDERGROUND CONDUITS PER DWG E11, DETAIL "B".

(2) EXPOSED CONDUIT TRANSITIONS PER DWG E11, DETAIL "G".

(3) EXPOSED CONDUITS PER DWG E11, DETAIL "A".

(4) SEE DWG E30 FOR CONDUIT & WIRE INSTALLATION REQUIREMENTS & FIXTURE SCHEDULE. CIRCUITS SHOWN ARE FED FROM PANEL LP-42.

(5) PRIMARY & SECONDARY CONDUITS, TRANSFORMER PAD, GROUNDING SYSTEM, BARRIER POSTS & PRIMARY VAULT RISER TO BE INSTALLED BY CONTRACTOR PER UTILITY ENGINEERED DRAWINGS.

(6) HOUSEKEEPING CONCRETE PAD PER DWG E12, DETAIL "A".

(7) GROUND BONDS TO CONSIST OF #2/0 BARE COPPER WITH 30" MINIMUM COVER, INSTALL GROUND ROD HANDHOLE PER DWG E11, DETAIL "E".

(8) EXISTING CONDUITS TO BE RESCHEDULED, SEE CONDUIT SCHEDULE FOR DETAILS.

(9) PLACE TRANSFORMER ON 3-1/2" HOUSEKEEPING CONCRETE PAD. SPACE TRANSFORMER OUT FROM WALL PER TRANSFORMER MANUFACTURER'S REQUIREMENTS.

(10) MOUNT RECEPTACLE 5' ABOVE FLOOR.

(11) REPLACE EXISTING PULL BOX WITH MINIMUM 17" x 30" PULL BOX PER DWG E12, DETAIL "F".

(12) ROUTE NEW CONDUITS TO EXISTING PULL BOX.

T.E.E.m.
(916) 457-8144

© APRIL 2017
ATEEM ENGINEERING
ALL RIGHTS RESERVED

Z:\ACADDWG\2015\1509b\DESIGN\1509Be042-D.dwg 7/20/2017 2:01 PM Zak-kad

REGISTERED PROFESSIONAL ENGINEER
JOHN M. KING
No. 19998
Exp.6-30-2018
ELECTRICAL
STATE OF CALIFORNIA
7/21/2017

City of Santa Rosa
Transportation & Public Works

NO.	DATE	REVISION	BY

DATE: JULY, 2017
CHK BY: SMK
SCALE: AS SHOWN
DWN BY: ZKV

APPROVED: Acting Deputy Director - Engineering
By _____ Date 8/1/17
Andrew Allen

CITY OF SANTA ROSA
FARMERS LANE WELL FACILITIES REHABILITATION

WELL 4-2 ELECTRICAL SITE PLAN, E42

CONTRACT NO. C01839

SHEET 35 OF 40

FILE NO. 2017-0014

WELL REHABILITATION

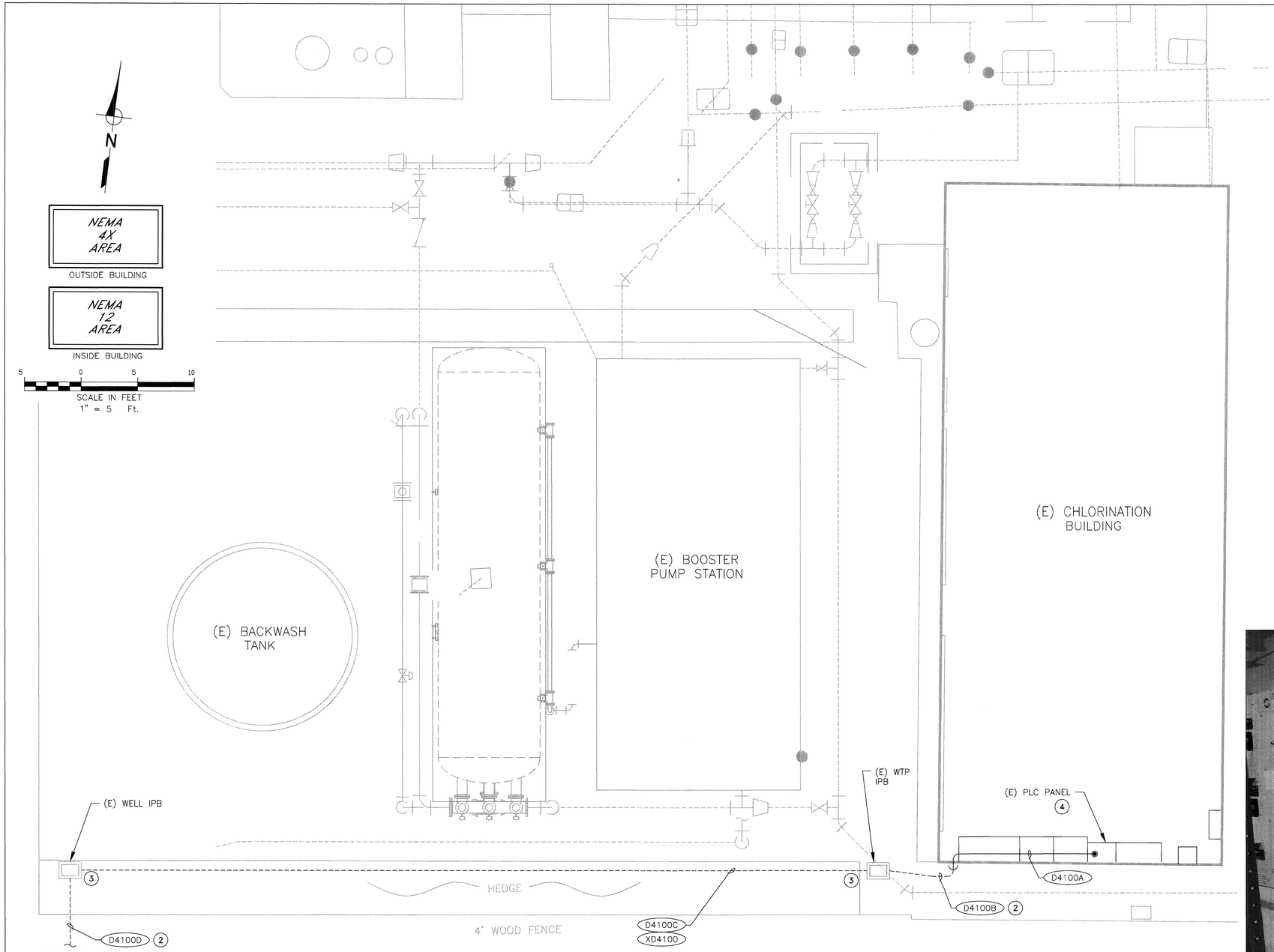

EXISTING WATER TREATMENT PLANT ELECTRICAL PLAN (1)

SCALE: 1" = 5'

NOTES:
1. UNDERGROUND CONDUITS PER DWG E11, DETAIL "B".
2. EXISTING CONDUITS TO BE RESCHEDULED, SEE CONDUIT SCHEDULE FOR DETAILS.
3. ROUTE NEW CONDUITS TO (E) PULL BOX.
4. INSTALL NEW FIBER OPTIC PATCH PANEL AND ETHERNET SWITCH IN EXISTING PLC PANEL PER CITY'S INSTRUCTIONS, SEE PHOTO "A" & "B".

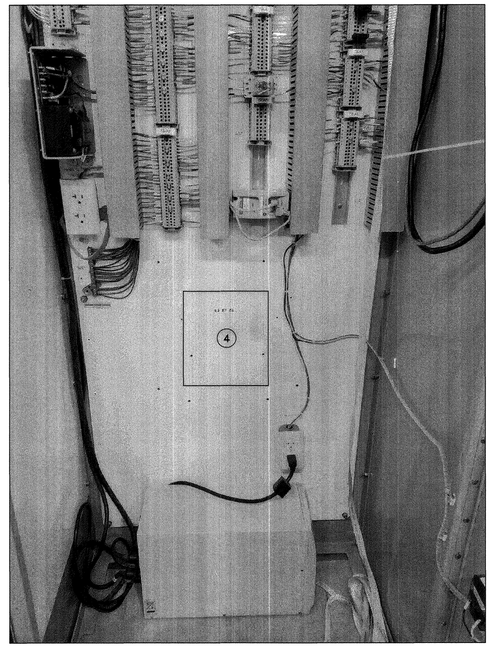

PLC BACKPAN (A)

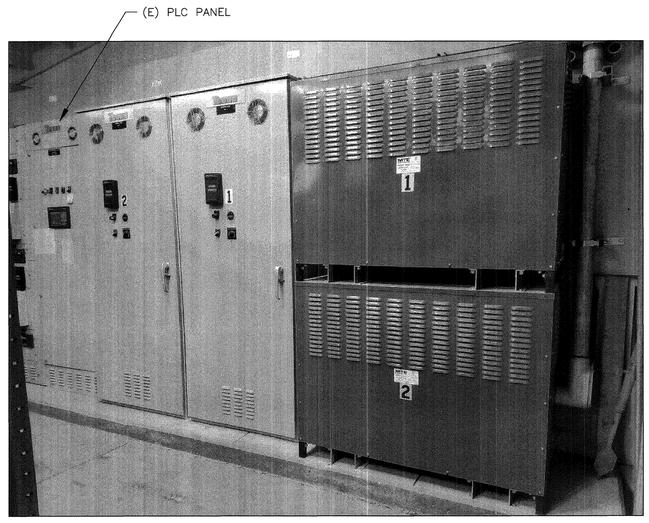

PLC PANEL (B)

T.E.E.M.
(916) 457-8144

© APRIL 2017
ATEEM ENGINEERING
ALL RIGHTS RESERVED

Z:\ACADDWG\2015\1509b\DESIGN\1509Be050-D.dwg 7/20/2017 2:12 PM Zak-kad

REGISTERED PROFESSIONAL ENGINEER — Scott M. Kimball — No. 15698 — Exp.6-30-2019 — ELECTRICAL — STATE OF CALIFORNIA
7/21/2017

City of Santa Rosa
Transportation & Public Works

NO.	DATE	REVISION	BY

SCALE: AS SHOWN
DWN BY: ZKV
DATE: JULY, 2017
CHK BY: SMK

APPROVED: Acting Deputy Director - Engineering
By Andrew Allen Date 8/1/17

CITY OF SANTA ROSA
FARMERS LANE WELL FACILITIES REHABILITATION

EXISTING WATER TREATMENT PLANT ELECTICAL PLAN, E50

CONTRACT NO. C01839
SHEET 36 OF 40
FILE NO. 2017-0014

WELL REHABILITATION

SYMBOL	DESCRIPTION
	P & I DIAGRAM SYMBOLS
XXX / XXX	FIELD MOUNTED INSTRUMENT
XXX / XXX	FACE MOUNTED INSTRUMENT ON LOCAL PANEL, OPERATOR ACCESSIBLE
XXX / XXX	FACE MOUNTED INSTRUMENT ON FIELD PANEL, OPERATOR ACCESSIBLE
XXX / XXX	INSTRUMENT MOUNTED IN LOCAL PANEL, OPERATOR INACCESSIBLE
XXX / XXX	INSTRUMENT MOUNTED IN FIELD PANEL, OPERATOR INACCESSIBLE
I	OPERATION PERFORMED WITH LOGIC OR HARDWIRED DEVICES
DWG #	– REFERENCE ELEMENTARY DWG. #
XXX / XXX	PLC OR COMPUTER FUNCTION PERFORMING OPERATION WITH VISUAL INDICATION
XXX / XXX	PLC OR COMPUTER FUNCTION PERFORMING OPERATION WITH VISUAL ALARM INDICATION
XXX / XXX	PLC OR COMPUTER PERFORMING INTERNAL OPERATION
XXX / XXX	PLC OR COMPUTER PERFORMING INTERNAL ALARM OPERATION
$\propto \int \partial/\partial t$	PROPORTIONAL, INTEGRAL, AND DIFFERENTIAL PARAMETERS
% +/–	RATIO AND BIAS PARAMETERS
	AUDIBLE ALARM (BUZZER OR HORN)
R#–C#	ANNUNCIATOR WINDOW R – ROW # C – COLUMN #
X	LAMP INDICATION (STATUS OR ALARM)
XXXXX	DISCRETE INPUT
	DISCRETE OUTPUT
	ANALOG INPUT
	ANALOG OUTPUT
a XXXX	JUMP TAG FROM ONE AREA TO ANOTHER AREA OF DRAWING "a" TAG CONNECT POINT ON EACH DRAWING
XXXX a	
P–X	CONTINUED ON DWG P–X
P–X	
#	AUTODIALER PRIORITY # PC BASED SOFTWARE

SYMBOL	DESCRIPTION
	P & I DIAGRAM SYMBOLS
OPEN / CLOSED	GATE VALVE
OPEN / CLOSED	PLUG VALVE
OPEN / CLOSED	BALL VALVE
OPEN / CLOSED	BUTTERFLY VALVE
	GATE (GENERAL)
	CHECK VALVE (GENERAL)
	PRESSURE RELIEF VALVE
	PUMP (GENERAL)
	PROGRESSIVE CAVITY PUMP
	DIAPHRAGM PUMP
	ROTARY SCREW PUMP
	BLOWER (GENERAL)
XXXX	VALVE/GATE NUMBER
XXXXX	EQUIPMENT NUMBER
	ELECTRIC SIGNAL
	LOGIC OR DATA SIGNAL
	PNEUMATIC SIGNAL
	CAPILLARY TUBING (FILLED SYSTEM)
	HYDRAULIC SIGNAL
ES / AS	SONIC OR ELECTROMAGNETIC SIGNAL
E	ELECTRIC SUPPLY
SA	SERVICE AIR
IA	INSTRUMENT AIR
	DISCONNECT SWITCH

INSTRUMENT IDENTIFICATION LETTERS

	FIRST – LETTER	SUCCEEDING – LETTER			
	MEASURED OF INITIATING VARIABLE	MODIFIER	READOUT PASSIVE FUNCTION	OUTPUT FUNCTION	MODIFIER
A	ANALYSIS		ALARM		
B	BURNER, COMBUSTION		USER'S CHOICE	USER'S CHOICE	USER'S CHOICE
C	CONDUCTIVITY			CONTROLLER	
D	DENSITY	DIFFERENTIAL			
E	VOLTAGE		SENSOR, PRIMARY ELEMENT		
F	FLOW RATE	RATIO (FRACTION)			
G	GENERAL		GLASS VIEWING DEVICE		
H	HAND				HIGH, OPENED
I	CURRENT (ELEC.)		INDICATING, INDICATOR		
J	POWER	SCAN			
K	TIME, TIME SCHEDULE	TIME RATE OF CHANGE		CONTROL STATION	
L	LEVEL		LIGHT		LOW, CLOSED
M	MOISTURE	MOMENTARY			MIDDLE
N	STATUS		STATUS	USER'S CHOICE	USER'S CHOICE
O	OPERATOR		ORIFICE, RESTRICTION		
P	PRESSURE, VACUUM		POINT (TEST) CONNECTION		
Q	QUANTITY	INTEGRATE, TOTALIZE			
R	RESET		RECORD		
S	SPEED, FREQUENCY	SAFETY		SWITCH	
T	TEMPERATURE			TRANSMITTER	TEST
U	MULTIVARIABLE		MULTIFUNCTION	MULTIFUNCTION	MULTIFUNCTION
V	VIBRATION, MECH. ANALYSIS			VALVE, DAMPER LOUVER	
W	WEIGHT, FORCE		WELL		
X	SWITCH	X AXIS	UNCLASSIFIED	UNCLASSIFIED	UNCLASSIFIED
Y	EVENT, STATE OR PRESENCE	Y AXIS		RELAY, COMPUTER, CONVERTOR	
Z	POSITION DIMENSION	Z AXIS		DRIVER, ACTUATOR, UNCLASSEIFIED FINAL CONTROL ELEMENT	

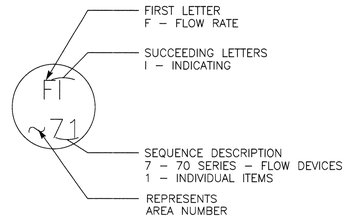

P&ID INSTRUMENT IDENTIFICATION EXAMPLE

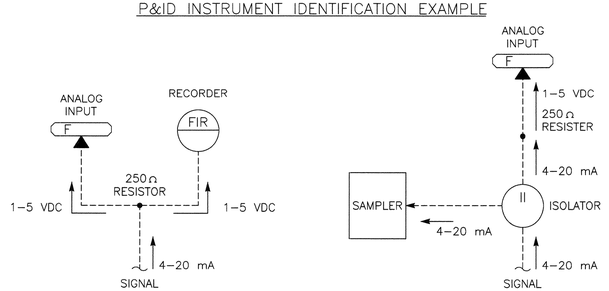

TYPICAL SIGNAL FLOWS

NUMBERING SEQUENCE

SEQUENCE NUMBER	DESCRIPTION
00	COMMON ALARM
01–09	INDIVIDUAL ITEMS
10	MECHANICAL
20	MECHANICAL
30	MECHANICAL
40	MECHANICAL
50	LEVEL DEVICES
60	PRESSURE DEVICES
70	FLOW DEVICES
80	ANALYTICAL DEVICES
90	SAFETY & SECURITY DEVICES

T.E.E.M.
(916) 457-8144

© APRIL 2017
ATEEM ENGINEERING
ALL RIGHTS RESERVED

REGISTERED PROFESSIONAL ENGINEER
JOHN M. KING
No. 15698
Exp.6-30-2018
ELECTRICAL
STATE OF CALIFORNIA
7/21/2017

City of Santa Rosa
Transportation & Public Works

NO.	DATE	REVISION	BY

DATE: JULY, 2017
CHK BY: SMK
SCALE: AS SHOWN
DWN BY: ZKV
APPROVED: Acting Deputy Director – Engineering
By Andrew Allen
Date 8/1/17

CITY OF SANTA ROSA
FARMERS LANE WELL FACILITIES
REHABILITATION

INSTRUMENTATION SYMBOLS & ABBREVIATIONS, I1

CONTRACT NO.
C01839
SHEET 37 OF 40
FILE NO. 2017–0014

WELL REHABILITATION

Z:\ACADDWG\2015\1509b\DESIGN\1509BI001–D.dwg 5/31/2017 4:30 PM Zak–kad

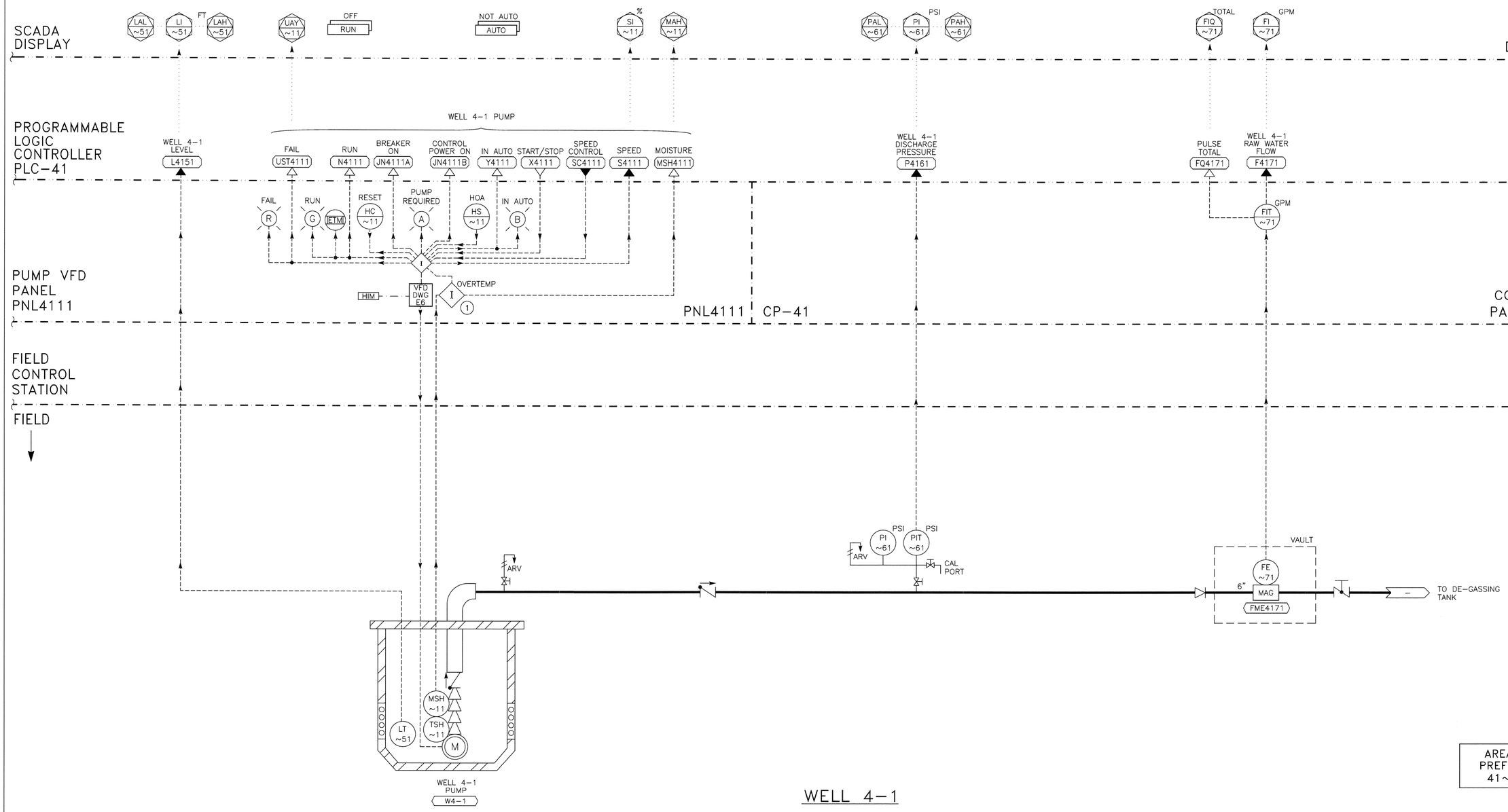

WELL 4-1

NOTES: (1) MOISTURE/OVERTEMP RELAY SUPPLIED BY PUMP SUPPLIER AND INSTALLED BY SYSTEM SUPPLIER.

T.E.E.M.
(916) 457-8144

© APRIL 2017
ATEEM ENGINEERING
ALL RIGHTS RESERVED

Z:\ACADDWG\2015\1509b\DESIGN\1509BI002-D.dwg 7/5/2017 3:17 PM Zak-kad

REGISTERED PROFESSIONAL ENGINEER
JOHN M. KIMMINGS
NO. 15698
Exp.6-30-2018
ELECTRICAL
STATE OF CALIFORNIA
7/21/2017

City of Santa Rosa
Transportation & Public Works

NO.	DATE	REVISION	BY

SCALE: AS SHOWN
DWN BY: ZKV
DATE: JULY, 2017
CHK BY: SMK
APPROVED: Acting Deputy Director – Engineering
By Andrew Allen Date 8/1/17

CITY OF SANTA ROSA
FARMERS LANE WELL FACILITIES
REHABILITATION

WELL 4-1 P&ID, I2

CONTRACT NO. C01839
SHEET 38 OF 40
FILE NO. 2017-0014

WELL REHABILITATION

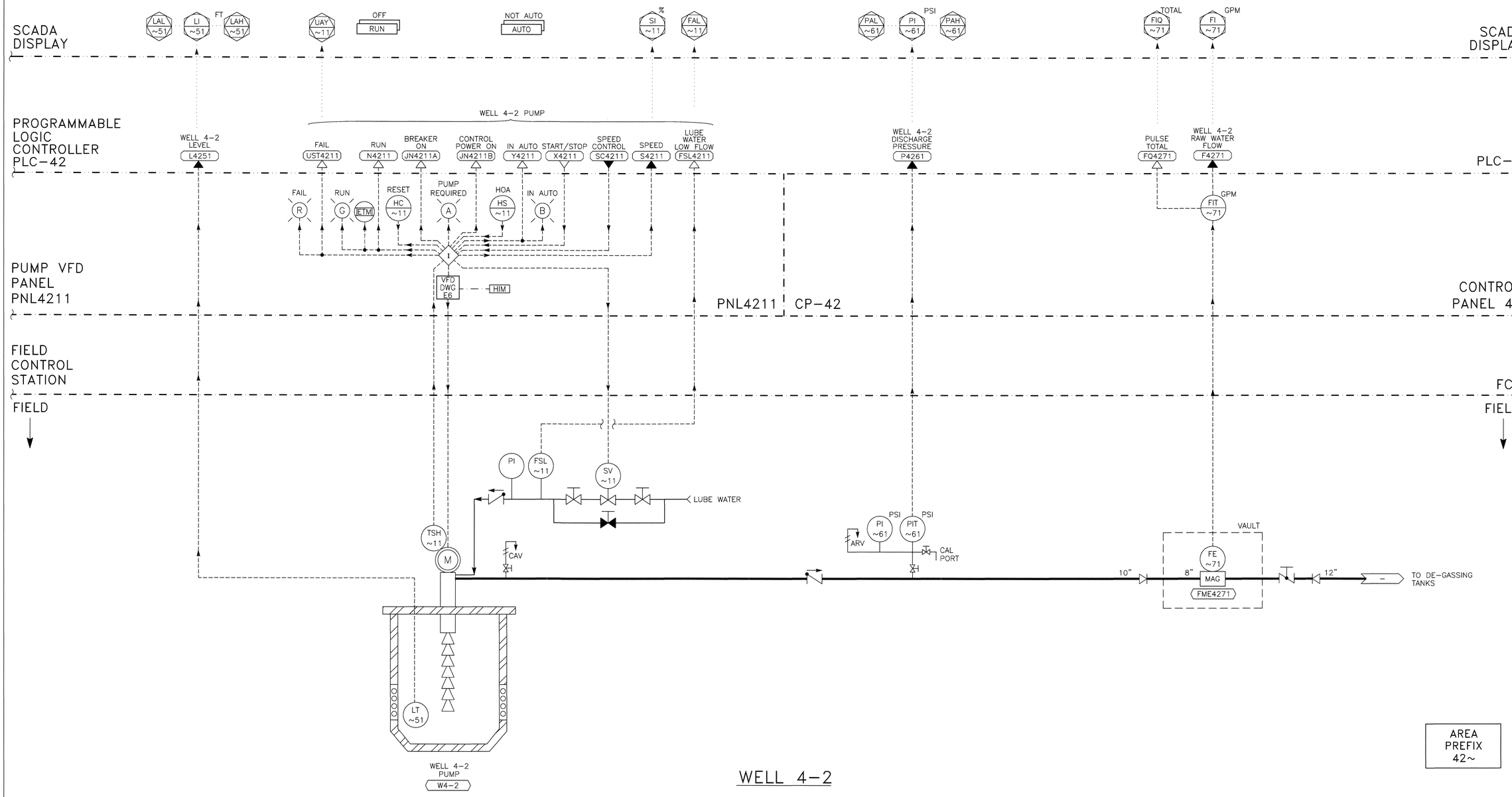

WELL 4-2

T.E.E.M.
(916) 457-8144

© APRIL 2017
ATEEM ENGINEERING
ALL RIGHTS RESERVED

Z:\ACADDWG\2015\1509b\DESIGN\1509BI003-D.dwg 7/5/2017 3:13 PM Zak-kad

REGISTERED PROFESSIONAL ENGINEER
JOHN M. KIMMEL
NO. 15698
Exp.6-30-2018
ELECTRICAL
STATE OF CALIFORNIA
7/21/2017

City of Santa Rosa
Transportation & Public Works

NO.	DATE	REVISION	BY

SCALE: AS SHOWN
DWN BY: ZKV
DATE: JULY, 2017
CHK BY: SMK

APPROVED: Acting Deputy Director - Engineering
By Andrew Allen Date 8/1/17

CITY OF SANTA ROSA
FARMERS LANE WELL FACILITIES
REHABILITATION

WELL 4-2 P&ID, I3

CONTRACT NO. C01839
SHEET 39 OF 40
FILE NO. 2017-0014

WELL REHABILITATION

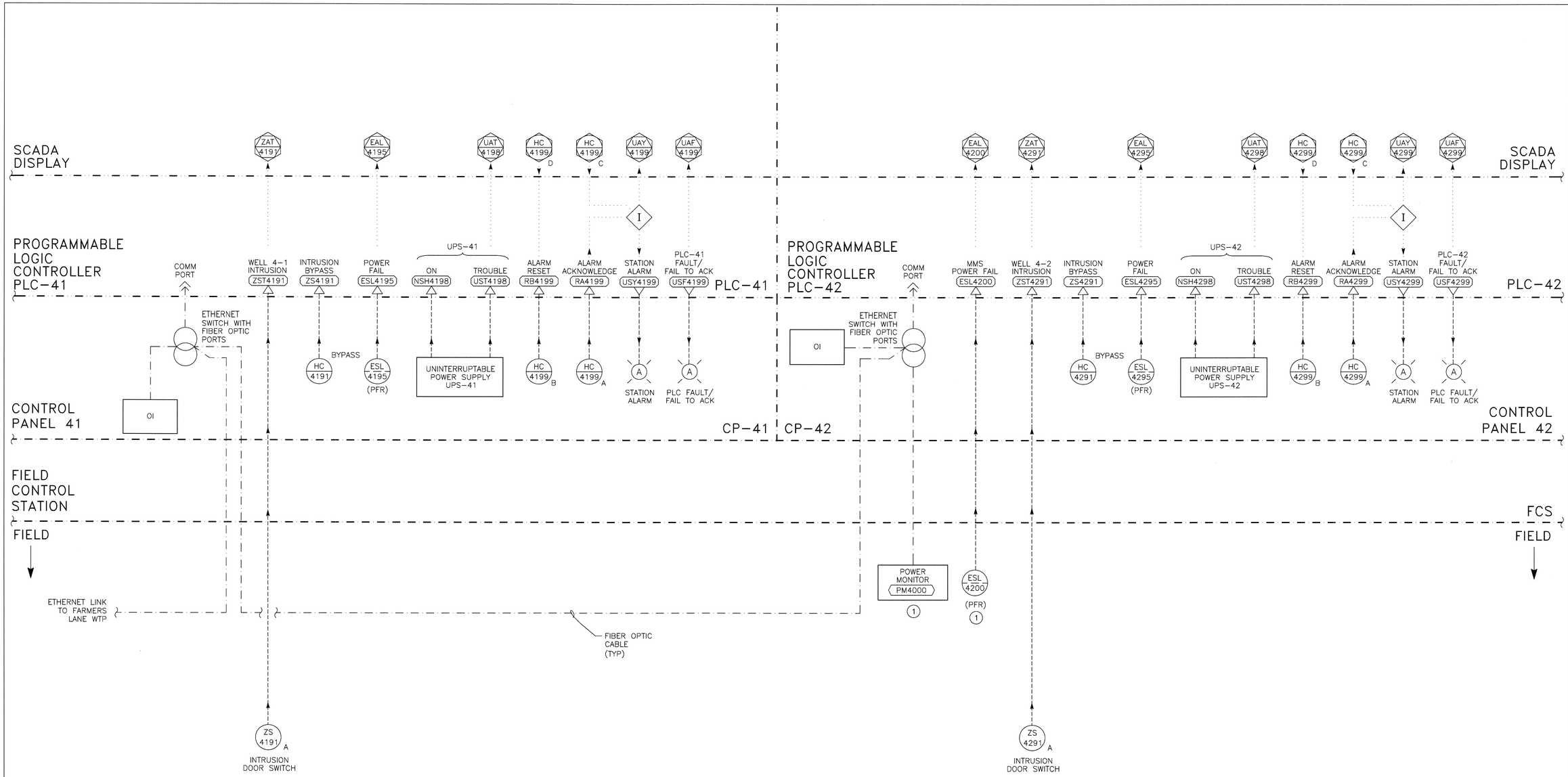

AUXILIARY SYSTEMS

NOTES: (1) LOCATED IN METER/MAIN SWITCHBOARD.

T.E.E.M.
(916) 457-8144

© APRIL 2017
ATEEM ENGINEERING
ALL RIGHTS RESERVED

Z:\ACADDWG\2015\1509b\DESIGN\1509BI004-D.dwg 7/5/2017 3:24 PM Zak-kad

REGISTERED PROFESSIONAL ENGINEER
NO. 15698
Exp.6-30-2018
ELECTRICAL
STATE OF CALIFORNIA
7/21/2017

City of Santa Rosa
Transportation & Public Works

NO.	DATE	REVISION	BY

SCALE: AS SHOWN
DWN BY: ZKV
DATE: JULY, 2017
CHK BY: SMK

APPROVED: Acting Deputy Director – Engineering
By Andrew Allen Date 8/1/17

CITY OF SANTA ROSA
FARMERS LANE WELL FACILITIES
REHABILITATION

AUXILIARY SYSTEMS P&ID, I4

CONTRACT NO. C01839
SHEET 40 OF 40
FILE NO. 2017-0014

WELL REHABILITATION