CITY OF SANTA ROSA

IMPROVEMENT PLANS FOR

EMERGENCY WELL 7

AT A PLACE TO PLAY PARK

CONTRACT No. C01965

PROJECT DATA

PROJECT SCOPE: CONSTRUCT PUMP STATION FACILITY ON EXISTING WELL INCLUDING WELL EQUIPPING, MASONRY BUILDING, ASPHALT PAVING, CUSTOM CHAIN LINK FENCE FRAME, AND ELECTRICAL AND INSTRUMENTATION

PROJECT ELEVATION: 100 FT±

CONTRACTOR LICENSE: CLASS A

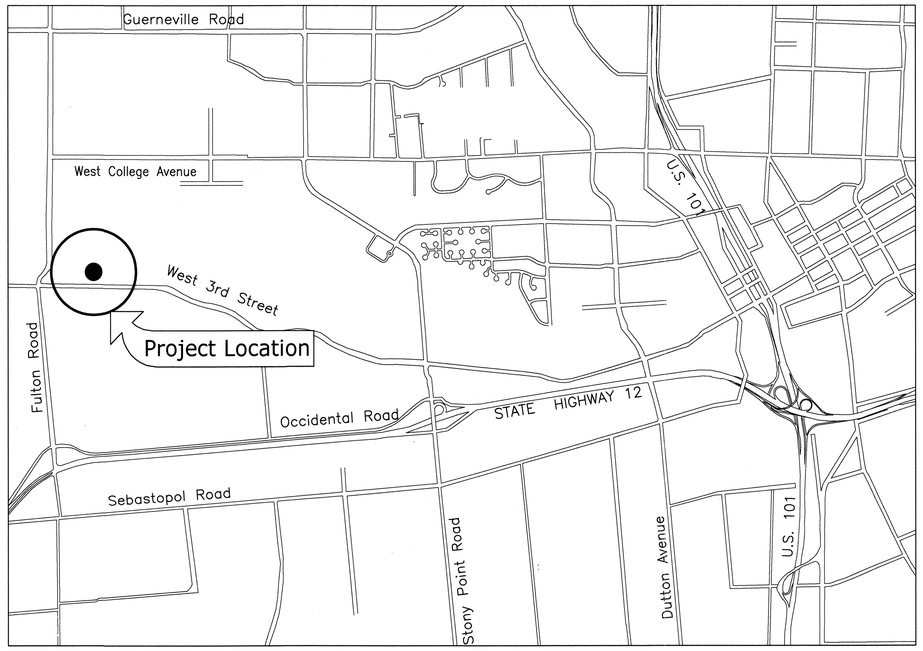

LOCATION MAP
NOT TO SCALE

INDEX TO SHEETS

Sheet No.	Title	Sheet No.	Title
1.	Cover Sheet	24.	MCC-1 One Line Diagram, E3
2.	Legend, Abbreviations, and General Notes	25.	MCC-1 Elevation, E4
3.	Site Work and Grading Plan	26.	Pump Elementary Diagram, E5
4.	Site Utility Plan, Profiles, and Details	27.	Control Panel Elevation & Layout, E6
5.	Civil Sections and Details 1	28.	Control Panel Elementary Diagrams, E7
6.	Fence Details and Gate Details	29.	Example Interconnect Diagram, E10
7.	Pump Station Mechanical Layout	30.	Typical Electrical Details No. 1, E11
8.	Mechanical Sections and Details	31.	Typical Electrical Details No. 2, E12
9.	Mechanical Details 1	32.	Typical Electrical Details No. 3, E13
10.	Mechanical Details 2	33.	Panelboard, Lighting Schedule & General Notes, E20
11.	Elevations		
12.	Floor Plan	34.	Electrical Overall Site Plan, E21
13.	Architectural Details and Schedules	35.	Emergency Well Pump Station Site Plan, E22
14.	General Notes & Specifications	36.	Pump Station Building Electrical Reflective Plan, E30A
15.	Statement of Special Inspections		
16.	Typical Details	37.	Pump Station Building Electrical Base Plan, E30B
17.	Foundation Plan		
18.	Roof Framing Plan	38.	Pump Station Building Power Plan, E30C
19.	Building Sections	39.	Instrumentation Symbols & Abbreviations, I1
20.	Foundation Sections and Details	40.	Emergency Well 7 P&ID, I2
21.	Roof Framing Sections and Details	41.	Hypochlorite System P&ID, I3
22.	Electrical Symbols and Abbreviations, E1	42.	Auxiliary Systems P&ID, I4
23.	Existing Main Switchboard (MS) One Line Diagram & Elevation, E2		

BID DOCUMENTS
JANUARY 2020

BEFORE EXCAVATING
CALL U.S.A.
UNDERGROUND SERVICE ALERT
800-642-2444
TWO WORKING DAYS BEFORE ALL
PLANNED WORK OPERATIONS

RECORD PLAN DATA

PROJECT START:
PROJECT END:
GEN. CONTRACTOR:
SUPERINTENDENT:
UNDERGROUND CONTRACTOR:
FOREMAN:
SEWER PIPE TYPE:
MANUFACTURER:
SEWER FITTINGS MANUFACTURER:
M.H. MANUFACTURER:
WATER PIPE TYPE:
MANUFACTURER:
WATER VALVE MANUFACTURER:
WATER FITTINGS MANUFACTURER:
WATER SERVICE TYPE:
MANUFACTURER:
FIRE HYDRANT TYPE:
MANUFACTURER:
INSPECTOR:
CONSTRUCTION MANAGER:
RECORD PLANS BY:
ADDITIONAL INFO:

REGISTERED PROFESSIONAL ENGINEER
JAMES P. CONNELL
Exp. 6-30-20
CIVIL
STATE OF CALIFORNIA

NO.	DATE	REVISION	BY	DEPT.	SIGNATURE	DATE
				DESIGN/CONST		1/1/20
				SURVEY		1/15/20
				PW FIELD SVC'S		1/16/20
				UTILITIES OP'S		1/15/20
				TRAFFIC		1/22/20
				PARKS		1/22/20

SCALE: AS SHOWN
DWN BY: JRR
DATE: JANUARY, 2020
CHK BY: JPC
APPROVED: *Deputy Director – Engineering*
By _____ Date 1/24/2020
Lori Urbanek, PE

CITY OF SANTA ROSA
EMERGENCY WELL 7

COVER SHEET

CONTRACT NO. C01965
SHEET 1 OF 42
FILE NO. 2017-0023

EMERGENCY WELL 7

O:\Clients\405 City of Santa Rosa\12-16-57 Place-to-Play Well\CAD\Production\405-12-16-57-Sht01-02.dwg 11/11/2019 1:10 PM sborber

ABBREVIATIONS

AB	AGGREGATE BASE
AC	ASPHALT CONCRETE
ACP	ASBESTOS CEMENT PIPE
AL	ALUMINUM
APN	ASSESSORS PARCEL NUMBER
ARV	AIR RELEASE VALVE
BLK	BLACK
BFV	BUTTERFLY VALVE
BTC	BELOW TOP OF CASING
CATV	CABLE TV
CC	CONCRETE CYLINDER, SEE WATER NOTE 19, THIS SHEET
CI	CAST IRON
CIP	CAST IRON PIPE
CL or ℄	CENTER LINE
CMLC	CEMENT MORTAR LINED & COATED
CONC	CONCRETE
CONT	CONTINUOUS
CO	CLEAN OUT
CLR	CLEAR
CR	CIRCLE
CT	COURT
DI	DRAIN INLET
DIA	DIAMETER
DIP	DUCTILE IRON PIPE
DR	DRAIN, DRIVE
DWG	DRAWING
EA	EACH
EF	EACH FACE
EL	ELEVATION
ELECT, E	ELECTRIC
ELB, ELL	ELBOW
EP	EDGE OF PAVEMENT
EW	EACH WAY
EX,	EXIST EXISTING
F/C	FACE OF CURB
FH	FIRE HYDRANT
FL	FLOW LINE
FLG	FLANGED
FCA	FLANGED COUPLING ADAPTER
FG	FINISHED GRADE
FT, '	FEET
G	GAS
GALV	GALVANIZED
GV	GATE VALVE
HC	HYDRANT CONNECTION
HGV	HORIZONTAL GATE VALVE
HORZ	HORIZONTAL
HP	HIGH PRESSURE
HT	HEIGHT
IN, "	INCH
INV	INVERT
LF	LINEAL FEET
LG	LONG
LT	LEFT
MATL	MATERIAL
MAX	MAXIMUM
MIN	MINIMUM
MJ	MECHANICAL JOINT
NG	NATURAL GROUND
NPT	NATIONAL PIPE THREAD
OC	ON CENTER
OD	OUTSIDE DIAMETER
OF	OVERFLOW
OH	OVERHEAD
PE	PLAIN END
PERM	PERMANENT
PL	PROPERTY LINE, PLASTIC
PH#	POTHOLE #
PJF	PREFORMED JOINT FILLER
PSF	POUNDS PER SQUARE FOOT
PSI	POUNDS PER SQUARE INCH
PVC	POLY VINYL CHLORIDE
R	RADIUS
RC	RELATIVE COMPACTION
RCP	REINFORCED CONCRETE PIPE
RD	ROAD
REQ'D	REQUIRED
RT	RIGHT
S	SLOPE
SCH	SCHEDULE
SCWA	SONOMA COUNTY WATER AGENCY
SCV	SYSTEM CHECK VALVE
SD	STORM DRAIN
SIM	SIMILAR
SHT	SHEET
SQ	SQUARE
SS	SANITARY SEWER
SST	STAINLESS STEEL
ST	SERVICE TUBING
STA	STATION
STD	STANDARD
STL	STAINLESS STEEL
T&B	TOP & BOTTOM
TEL	TELEPHONE
TEMP	TEMPORARY
THK	THICK
TOC, TC	TOP OF CONCRETE/CURB
TS	TRAFFIC SIGNAL
TV	TELEVISION CABLE
TYP	TYPICAL
UNO	UNLESS NOTED OTHERWISE
W/	WITH
W	POTABLE WATER
WHT	WHITE
WMH	WATER MANHOLE
WM	WATER METER
YEL	YELLOW

LEGEND

LINES

BOUNDARY . . . . .

PARCEL . . . . .

CENTER . . . . .

EASEMENT . . . . .

DESCRIPTION	EXISTING	PROPOSED
SEWER LATERAL & CLEANOUT	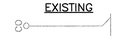	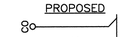
SEWER MAIN & MANHOLE		
ABANDONED PIPE	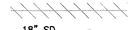	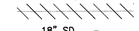
STORM DRAIN, MANHOLE & CATCH BASIN	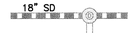	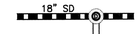
1" WATER SERVICE		
FIRE HYDRANT ASSEMBLY & TEE	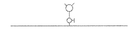	
WATER		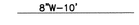
GAS	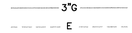	
ELECTRICAL		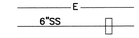
PLUG OR CAP		
CURB & CUTTER		
FENCE		
DITCH/SWALE		
DIRECTION OF FLOW		
DROP INLET		
JOINT POLE & GUY ANCHOR		
STREET LIGHT		
SIGN		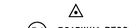
DECIDUOUS TREE/SHRUBS		
MONUMENT		
SURVEY CONTROL	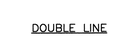	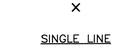
CONSTRUCTION NOTES		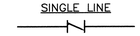
TREE TO BE PROTECTED		
TREE OR TREES TO BE REMOVED		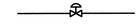

VALVES	DOUBLE LINE	SINGLE LINE
CHECK	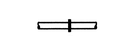	
GATE		
PRESSURE REDUCING	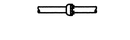	
JOINTS		
FLANGED		
MECHANICAL		

R1 ROADWAY RECONSTRUCT

BENCHMARK

CITY OF SANTA ROSA VERTICAL CONTROL NETWORK BENCHMARK E-34, ESTABLISHED FEBRUARY 1991 (BASED UPON NGVD 29). ELEVATION: 95.54 FEET

BASIS OF BEARINGS

BEING NORTH 83° 08' 41" EAST BETWEEN THE CITY OF SANTA ROSA HORIZONTAL CONTROL NETWORK COORDINATE MONUMENTS G-267 & G-34. NAD 83 (2011) Epoch 2010

O:\Clients\405 City of Santa Rosa\12-16-57 Place-to-Play Well\CAD\Production\405-12-16-57-Sht01-02.dwg 11/11/2019 1:10 PM sborber

REGISTERED PROFESSIONAL ENGINEER
JAMES P. CONNELL
Exp. 6-30-20
CIVIL
STATE OF CALIFORNIA

City of Santa Rosa
Transportation & Public Works

NO.	DATE	REVISION	BY

DATE: JANUARY, 2020
CHK BY: JPC
SCALE: AS SHOWN
DWN BY: JRR

Engineering
Date 1/24/20

APPROVED: *Deputy Director – Engineering*
By _____ Date 1/24/20
Lori Urbanek, PE

CITY OF SANTA ROSA
EMERGENCY WELL 7

LEGEND, ABBREVIATIONS, AND GENERAL NOTES

CONTRACT NO. C01965
SHEET 2 OF 42
FILE NO. 2017-0023

EMERGENCY WELL 7

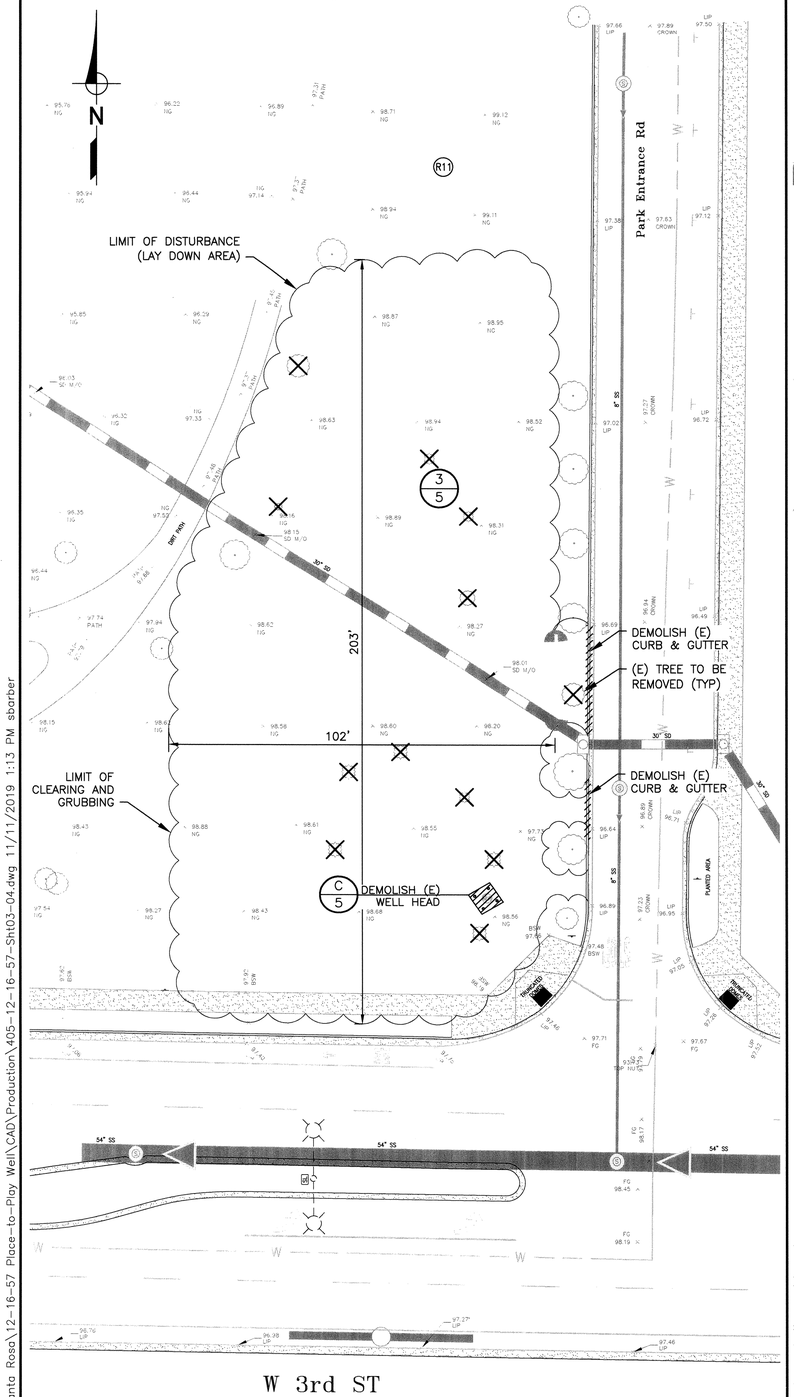

DEMOLITION/LIMITS OF DISTURBANCE

SCALE: 1" = 20'

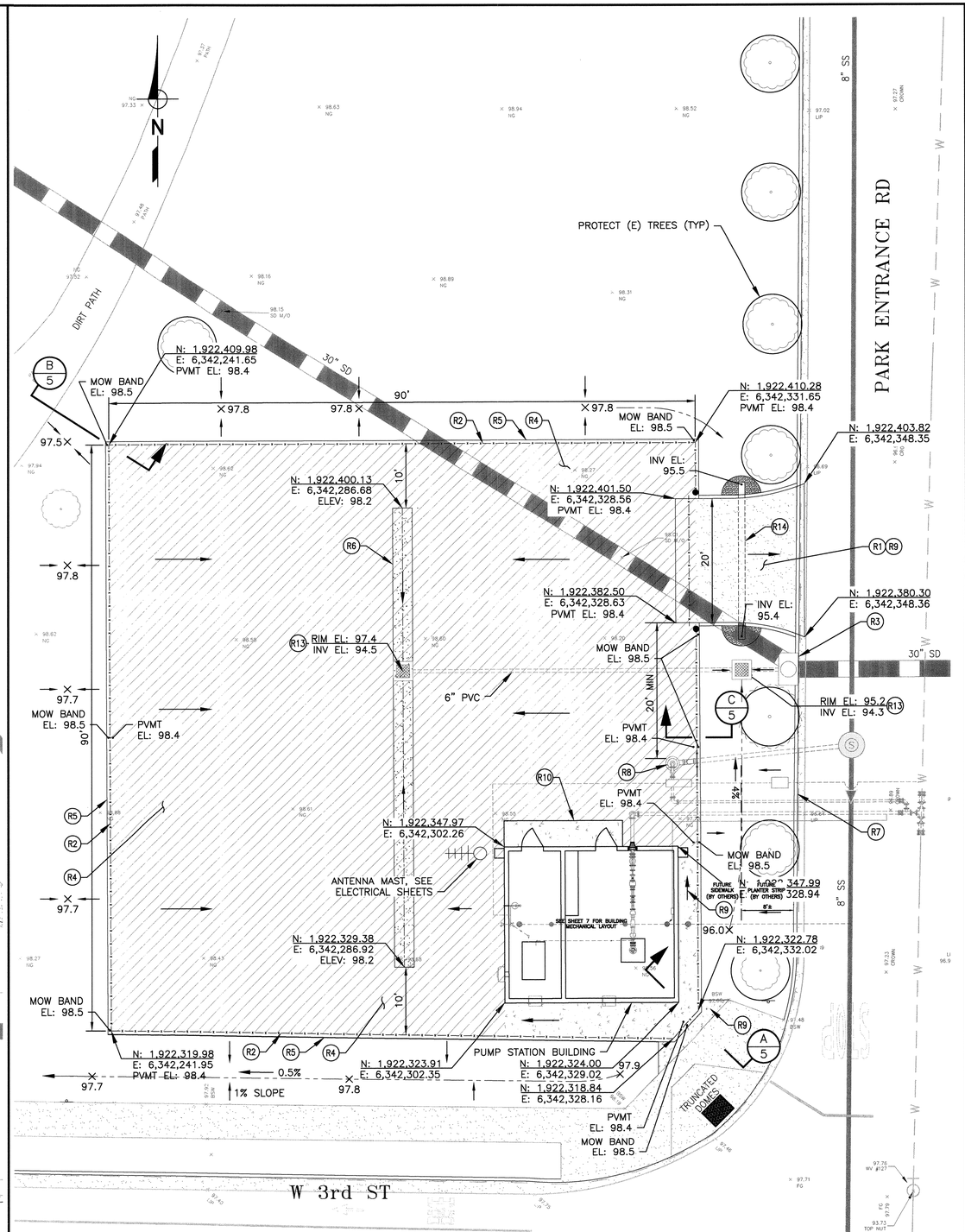

SITE WORK AND GRADING PLAN

SCALE: 1" = 10'

DRIVEWAY AND SITE CONSTRUCTION NOTES

- (R1) CURB RETURN DRIVEWAY (CITY STANDARD 250C), EXTEND CONCRETE APRON TO GATE WITH CONCRETE CURB EACH SIDE SIMILAR TO (CITY STANDARD 241)
- (R2) FENCE W/ROLLING GATE, SEE Sht 6
- (R3) PROTECT EXISTING DRAIN INLET FROM SEDIMENT
- (R4) CONCRETE PAVING, SEE DETAIL 2/Sht 5
- (R5) CONCRETE MOW BAND (MINIMUM DEPTH OF MOW BAND BASE SHALL BE 8" BELOW LOWEST GRADE) SEE DETAIL 3/Sht 5
- (R6) DRIVEWAY GUTTER, SEE DETAIL 17/Sht 10
- (R7) REPLACE CURB AND GUTTER DISTURBED BY CONSTRUCTION (CITY STANDARD 241)
- (R8) BOX OUT (NO ASPHALT) WITH HEADER BOARD AROUND AIR GAP STRUCTURE SEE DETAIL B/Sht 4
- (R9) CONCRETE WALKWAY/DRIVEWAY, SEE DETAIL 11/Sht 16
- (R10) CONCRETE LANDING, SEE DETAIL 1/Sht 5
- (R11) NO EQUIPMENT OR VEHICLES MAY BE LOCATED ON UNPAVED AREAS OUTSIDE THE LIMITS OF DISTURBANCE
- (R13) DRAIN INLET WITH 6" PVC OUTLET, SEE DETAIL X/Sht XX
- (R14) 12" SCH 80 PVC CARRIER PIPE. PROVIDE WITH RIP RAP INLET AND OUTLET.

REGISTERED PROFESSIONAL ENGINEER JAMES P. CONNELL Exp. 6-30-20 CIVIL STATE OF CALIFORNIA

City of Santa Rosa Transportation & Public Works

NO.	DATE	REVISION	BY

SCALE: AS SHOWN
DWN BY: JRR
DATE: JANUARY, 2020
CHK BY: JPC

APPROVED: *Deputy Director - Engineering*
By _____ Date 1/24/20
Lori Urbanek, PE

CITY OF SANTA ROSA
EMERGENCY WELL 7

SITE WORK AND GRADING PLAN

CONTRACT NO. C01965
SHEET 3 OF 42
FILE NO. 2017-0023

EMERGENCY WELL 7

O:\Clients\405 City of Santa Rosa\12-16-57 Place-to-Play Well\CAD\Production\405-12-16-57-Sht03-04.dwg 11/11/2019 1:13 PM sbarber

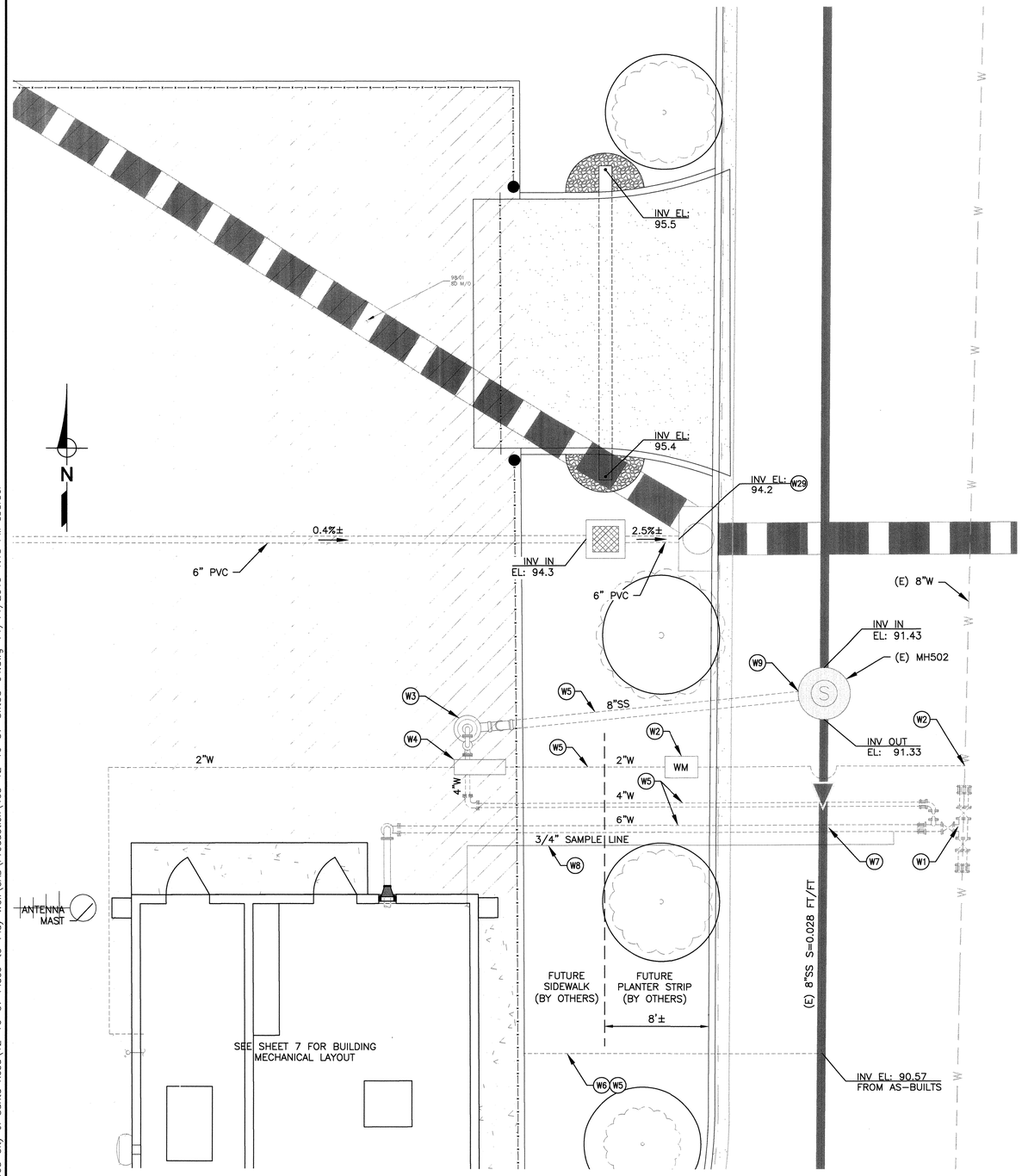

SITE UTILITY PLAN

SCALE: 1" = 5'

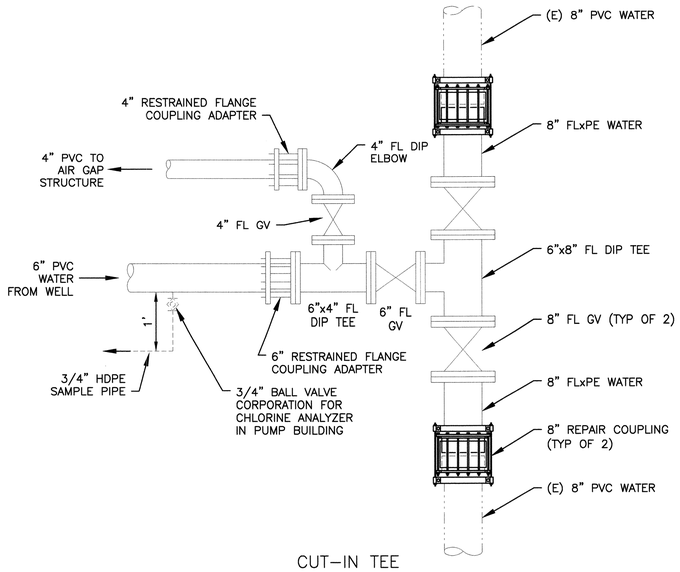

CUT-IN TEE

DETAIL A

SCALE: 3/4" = 1'-0"

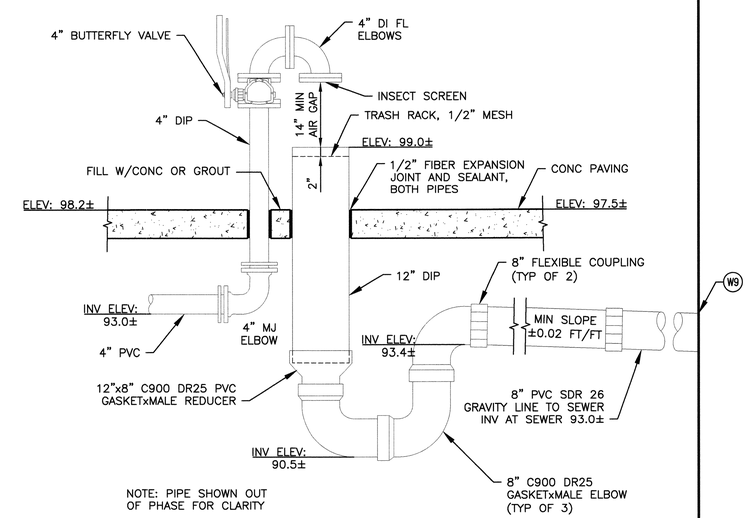

NOTE: PIPE SHOWN OUT OF PHASE FOR CLARITY

AIR GAP STRUCTURE

DETAIL B

SCALE: 3/4" = 1'-0"

WATER NOTES

- W1 8"x6" CUT-IN TEE AND FLUSH LINE, SEE DETAIL "A" THIS SHEET
- W2 2" HDPE SERVICE AND METER (CITY STANDARD 865-A)
- W3 AIR GAP STRUCTURE, SEE DETAIL "B" THIS SHEET
- W4 ABOVE GROUND BACKFLOW PREVENTION DEVICE (CITY STANDARD 874) WITH ENCLOSURE (CITY STANDARD 114)
- W5 PIPE BEDDING AND BACKFILL (CITY STANDARD 215) ALL CONSTRUCTION SHALL CONFORM TO APPROVED SHEETING, SHORING, AND BRACING PLAN
- W6 4-INCH SEWER LATERAL AND CLEANOUT (CITY STANDARD 513) SEE SHEET 7 FOR CLEANOUT LOCATION
- W7 SEWER-WATER MAIN CROSSING (CITY STANDARD 516)
- W8 3/4" HDPE SAMPLE LINE TO CHLORINE ANALYZER AND SAMPLE TAP IN WELL BUILDING, CONSTRUCT SIMILAR TO CITY STANDARD 863 WITHOUT METER SETTING OR METER BOX
- W9 CORE INTO (E) MH502 ABOVE BASE SLAB. MODIFY MANHOLE FLOOR TO DIRECT FLOW TO OUTLET PIPE. SEAL PENETRATION PER MANHOLE CONNECTION DETAIL 16/Sht 10
- W29 CORE INTO (E) SDMH. SEAL PENETRATION PER MANHOLE CONNECTION DETAIL 16/Sht 10

REGISTERED PROFESSIONAL ENGINEER JAMES P. CONNELL No. 63632 Exp. 6-30-20 CIVIL STATE OF CALIFORNIA

City of Santa Rosa
Transportation & Public Works

NO.	DATE	REVISION	BY

SCALE: AS SHOWN
DATE: JANUARY, 2020
DWN BY: JRR
CHK BY: JPC
APPROVED: Deputy Director - Engineering
By Lori Urbanek, PE Date 1/24/20

CITY OF SANTA ROSA
EMERGENCY WELL 7

SITE UTILITY PLAN, PROFILES, AND DETAILS

CONTRACT NO. C01965

SHEET 4 OF 42

FILE NO. 2017-0023

EMERGENCY WELL 7

O:\Clients\405 City of Santa Rosa\12-16-57 Place-to-Play Well\CAD\Production\405-12-16-57-Sht03-04.dwg 11/11/2019 1:13 PM sbarber

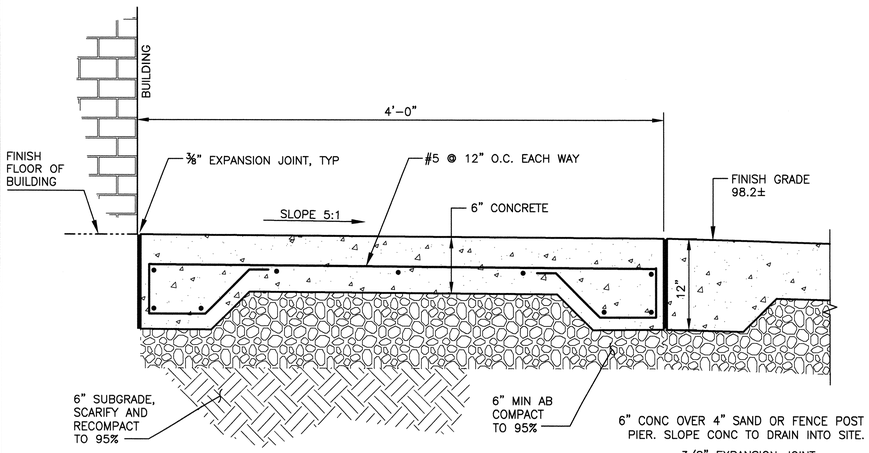

NOTES:
1. PROVIDE ½" ROUND FILLET OR CHAMFER ON ALL EDGES.
2. SURFACE FINISH SHALL BE LIGHT DELAYED BRUSHING, PARALLEL WITH BUILDING WALL.

CONCRETE LANDING

DETAIL 1/VAR

NOT TO SCALE

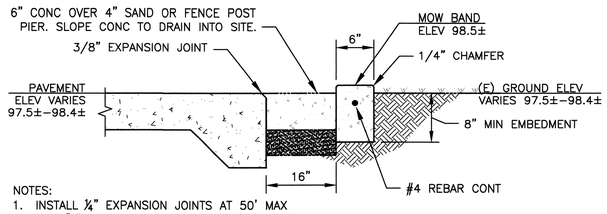

NOTES:
1. INSTALL ¼" EXPANSION JOINTS AT 50' MAX AND ⅜" SCORE LINES AT 5' MAX.
2. CONCRETE TO HAVE LIGHT BROOM FINISH.

CONCRETE MOW BAND

DETAIL 3/3

NOT TO SCALE

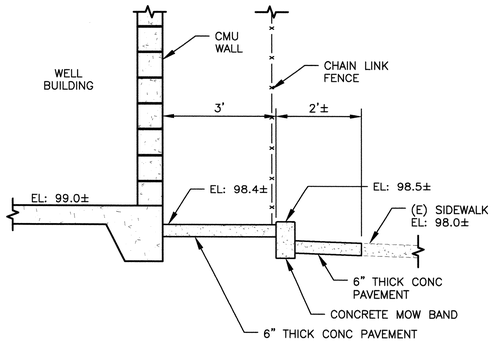

SE BUILDING CORNER SECTION

SECTION A/3

NOT TO SCALE

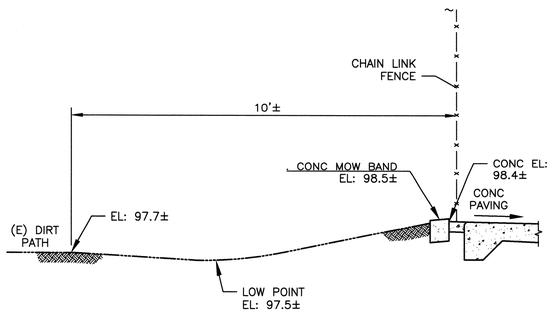

NW CORNER SECTION

SECTION B/3

NOT TO SCALE

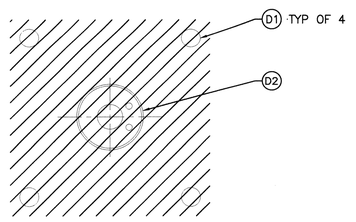

PLAN

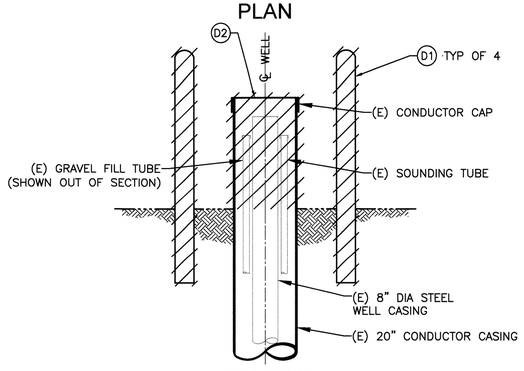

SECTION

(E) WELL HEAD DEMOLITION

DETAIL C/3

NOT TO SCALE

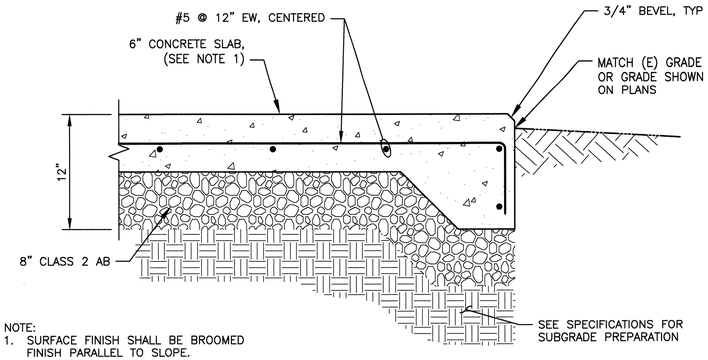

NOTE:
1. SURFACE FINISH SHALL BE BROOMED FINISH PARALLEL TO SLOPE.

TYPICAL CONCRETE PAVING SECTION

DETAIL 2/–

NOT TO SCALE

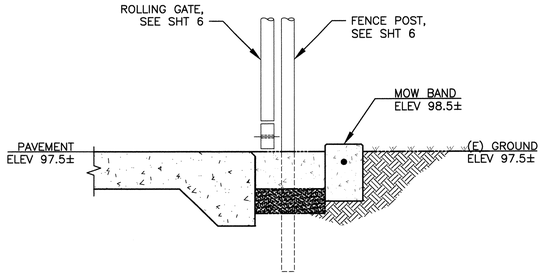

EDGE SECTION AT GATE

SECTION C/3

NOT TO SCALE

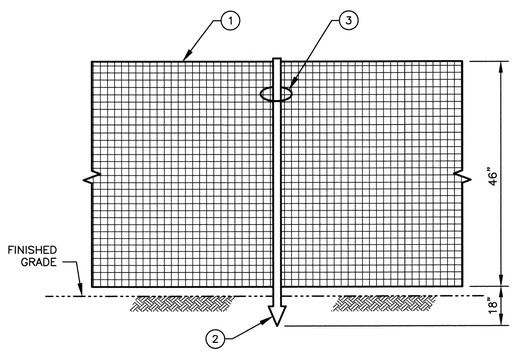

1. TREE PROTECTION FENCING, COLOR – ORANGE OR RED
2. LIGHTWEIGHT 5-1/2' HEIGHT STANDARD FORM QUALITY "T-POST" PLACED AS NEEDED. (POST SPACING 10' MAXIMUM)
3. SLIDE FABRIC OVER "T-POST" AND INSTALL METAL TIE WIRE AT TOP OF POST

TREE PROTECTION FENCE

DETAIL 5/3

NOT TO SCALE

DEMOLITION NOTES

D1 DEMOLISH (E) BOLLARDS AND CONCRETE PIERS

D2 CUT OR EXTEND (E) CONDUCTOR, CASING PIPE, GRAVEL FILL TUBE, AND SOUNDING TUBE TO MATCH WELL HEAD MODIFICATIONS ON SHEET 8. COVER AND PROTECT WELL (E) CASING TO REMAIN

REGISTERED PROFESSIONAL ENGINEER JAMES P. CONNELL Exp. 6-30-20 CIVIL STATE OF CALIFORNIA

City of Santa Rosa Transportation & Public Works

NO.	DATE	REVISION	BY

SCALE: AS SHOWN
DWN BY: JRR
DATE: JANUARY, 2020
CHK BY: JPC

APPROVED: Deputy Director – Engineering
By Lori Urbanek, PE Date 1/24/20

CITY OF SANTA ROSA
EMERGENCY WELL 7

CIVIL SECTIONS AND DETAILS 1

CONTRACT NO. C01965

SHEET 5 OF 42

FILE NO. 2017-0023

EMERGENCY WELL 7

O:\Clients\405 City of Santa Rosa\12-16-57 Place-to-Play Well\CAD\Production\405-12-16-57-Sht05-06.dwg 11/11/2019 1:16 PM sborber

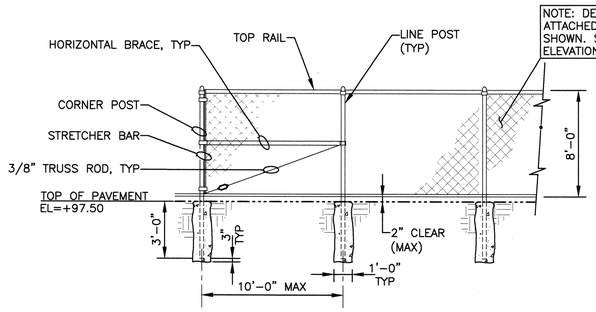

FENCE ELEVATION

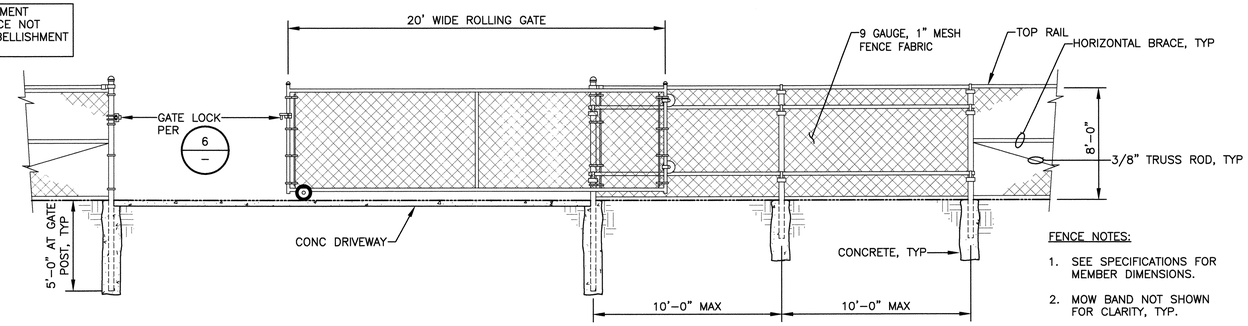

GATE ELEVATION

FENCE NOTES:

1. SEE SPECIFICATIONS FOR MEMBER DIMENSIONS.
2. MOW BAND NOT SHOWN FOR CLARITY, TYP.

CHAIN LINK FENCE AND ROLLING GATE

SCALE:1/4" = 1'-0"

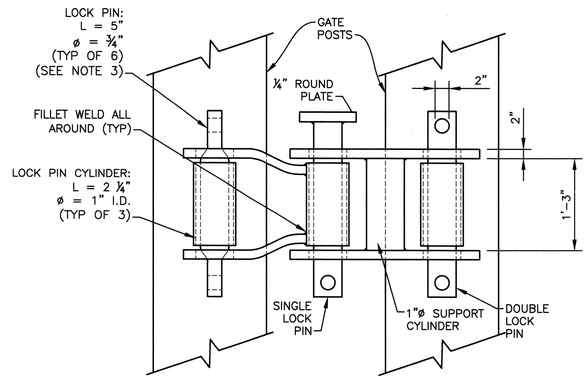

FRONT VIEW

NOTES:

1. CROSS BARS DO NOT GET WELDED TO POST, ONLY PIN CYLINDERS
2. INSTALL 4 FEET ABOVE GROUND
3. CONTRACTOR SHALL SUPPLY 3 SINGLE LOCK PINS AND 3 DOUBLE LOCK PINS

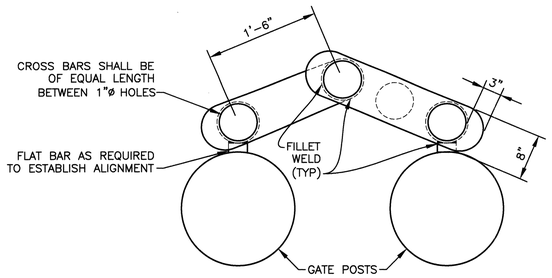

PLAN VIEW

GATE LOCK DETAIL

DETAIL 6

SCALE: 1" = 1'-0"

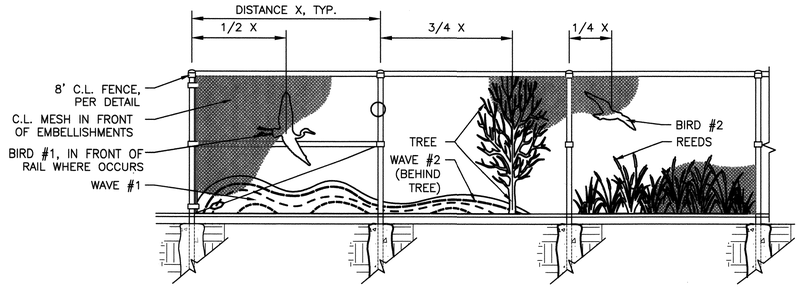

DECORATIVE EMBELLISHMENT ELEVATION

SCALE:1/4" = 1'-0"

NOTES:

1. FENCE AND GATE SHALL BE INSTALLED AS SHOWN AND DESCRIBED IN OTHER DETAILS AND SPECIFICATIONS. EMBELLISHMENTS SHALL BE MANUFACTURED AND INSTALLED PER THIS DETAIL.
2. EMBELLISHMENTS SHALL BE WATER JET CUT FROM 1/8" CORTEN STEEL SHEETS.
3. EMBELLISHMENTS HAVE BEEN DESIGNED TO ALLOW STACKING OF MULTIPLE DESIGNS ON 4X10 CORTEN STEEL SHEETS. THE FULL DESIGN OF 'WAVE #1,' 'WAVE #2,' AND 'TREE' SHALL EACH BE CUT FROM SINGLE SHEETS TO ELIMINATE ANY SEAMS.
4. ART FILES ARE AVAILABLE FOR THE CONTRACTOR'S USE (.DWG FILE FORMAT). CONTRACTOR SHALL MODIFY THE DESIGNS AS NEEDED FOR MANUFACTURING. CONTRACTOR SHALL SUBMIT A SHOP DRAWING SHOWING FINAL ARTWORK, AND ALL CHANGES SHALL BE APPROVED IN WRITING BY THE OWNER AND OWNER'S REPRESENTATIVE.
5. LOCATION OF EMBELLISHMENTS AS SHOWN IN DETAIL ARE A GUIDE FOR THE GENERAL INTENT OF THE LAYOUT. CONTRACTOR SHALL INSTALL ONE SECTION OF EMBELLISHMENTS FOR REVIEW AND APPROVAL BY OWNER AND OWNER'S REPRESENTATIVE PRIOR TO INSTALLING REMAINDER.
6. 10-GAUGE (1/8" MIN.) STEEL U-HOOKS SHALL BE WELDED EVERY 12" ALONG THE CENTER ON THE FRONT OF EMBELLISHMENTS, AND 3/16" HOLES (WATER JET OR DRILLED IN FIELD) SHALL BE PROVIDED EVERY 12" ALONG EMBELLISHMENT EDGES.
7. EMBELLISHMENTS SHALL BE ATTACHED TO THE INTERIOR OF THE FENCE MESH (BEHIND THE MESH) USING 10-GAUGE STEEL HOG RINGS SECURELY ATTACHED TO U-HOOKS AND HOLES.
8. POSTS ARE ASSUMED TO BE 10' O.C., HOWEVER SOME VARIATIONS MAY OCCUR. EMBELLISHMENTS MAY OVERLAP BEHIND POSTS IF REQUIRED.
9. NO EMBELLISHMENT SHALL BE INSTALLED ON THE SHORT CHAMFERED SECTION OF FENCE AT THE PROJECT'S SOUTHEAST CORNER.

REGISTERED PROFESSIONAL ENGINEER JAMES P. CONNELL No. Exp. 6-30-20 CIVIL STATE OF CALIFORNIA

City of Santa Rosa
Transportation & Public Works

NO.	DATE	REVISION	BY

SCALE: AS SHOWN
DWN BY: JRR
DATE: JANUARY, 2020
CHK BY: JPC

APPROVED: *Deputy Director - Engineering*
By _____ Date 1/24/20
Lori Urbanek, PE

CITY OF SANTA ROSA
EMERGENCY WELL 7

FENCE AND GATE DETAILS

CONTRACT NO. C01965
SHEET 6 OF 42
FILE NO. 2017-0023

EMERGENCY WELL 7

O:\Clients\405 City of Santa Rosa\12-16-57 Place-to-Play Well\CAD\Production\405-12-16-57-Sht05-06.dwg 11/11/2019 1:16 PM sbarber

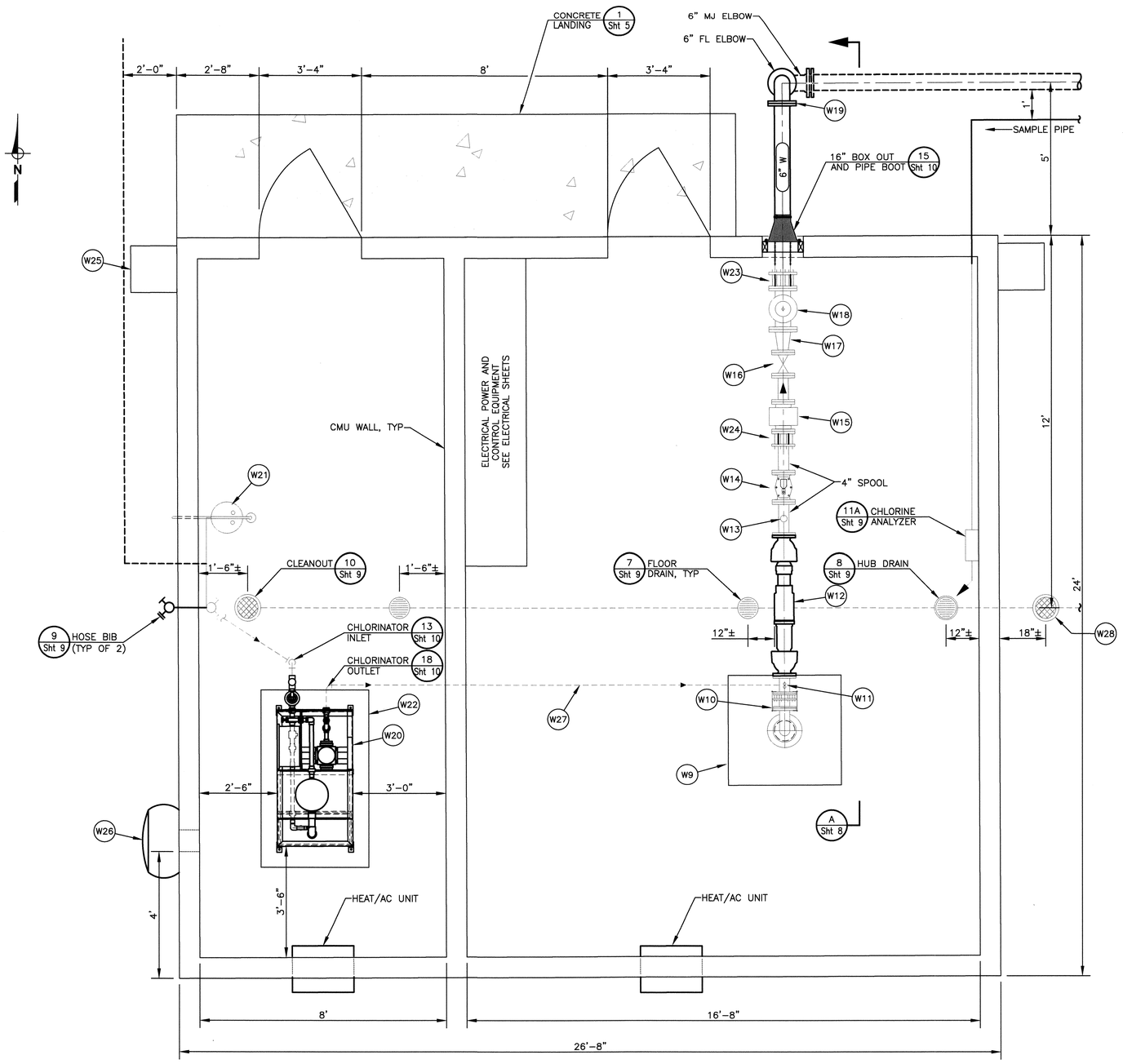

MECHANICAL LAYOUT

SCALE: 1/2" = 1'-0"

NOTES

- (W9) MODIFY WELL CASING AND CONDUCTOR AND CONSTRUCT WELL HEAD, SEE DETAIL 1/Sht 8
- (W10) 4" DISMANTLING JOINT
- (W11) CHLORINE INJECTION, SEE DETAIL 2/Sht 8
- (W12) 4" FORCE BALANCED DOUBLE BALL EXPANSION JOINT
- (W13) 1" COMBINATION AIR RELEASE/AIR VACUUM VALVE, SEE DETAIL 4/Sht 9
- (W14) 4" SWING CHECK VALVE
- (W15) 4" MAGNETIC FLOW METER
- (W16) 4" GATE VALVE
- (W17) 6"x4" REDUCER
- (W18) 6"x4" TEE WITH AIR RELEASE VALVE, PRESSURE GAUGE, AND PRESSURE SENSOR, SEE DETAIL 14/Sht 10
- (W19) INSULATING FLANGE, SEE DETAIL 3/Sht 8
- (W20) TABLET CHLORINATOR, SEE DETAIL 12/Sht 10
- (W21) EMERGENCY EYEWASH AND SHOWER, SEE DETAIL 5/SHT 9, PLUMB TO DRAIN OUTSIDE BUILDING.
- (W22) EQUIPMENT PAD, SEE DETAIL 1/Sht 20
- (W23) 6" FCA
- (W24) 4"FCA
- (W25) GUTTER DOWNSPOUT SPLASH BLOCK (TYP OF 2)
- (W26) WALL EXHAUSTER, SEE STRUCTURAL SHEETS
- (W27) 1" HOSE MOUNTED ON UNI-STRUT VERTICAL AND HORIZONTAL SUPPORTS ABOVE CEILING
- (W28) TWO WAY CLEANOUT (CITY STANDARD 513A)

JAMES P. CONNETT No. 63052 Exp. 6-30-20 CIVIL STATE OF CALIFORNIA — PROFESSIONAL ENGINEER

City of Santa Rosa
Transportation & Public Works

NO.	DATE	REVISION	BY

SCALE: AS SHOWN
DWN BY: JRR
DATE: JANUARY, 2020
CHK BY: JPC

APPROVED: Deputy Director - Engineering
By _____ Date 1/24/20
Lori Urbanek, PE

CITY OF SANTA ROSA
EMERGENCY WELL 7

PUMP STATION MECHANICAL LAYOUT

CONTRACT NO. C01965
SHEET 7 OF 42
FILE NO. 2017-0023

EMERGENCY WELL 7

O:\Clients\405 City of Santa Rosa\12-16-57 Place-to-Play Well\CAD\Production\405-12-16-57-Sht07-10.dwg 11/11/2019 1:17 PM sbarber

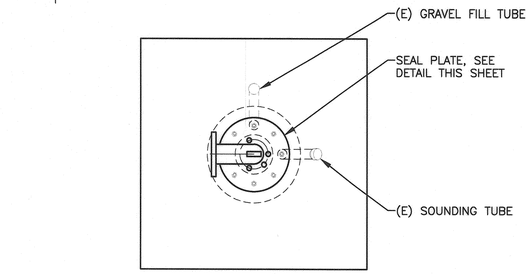

WELL PLAN

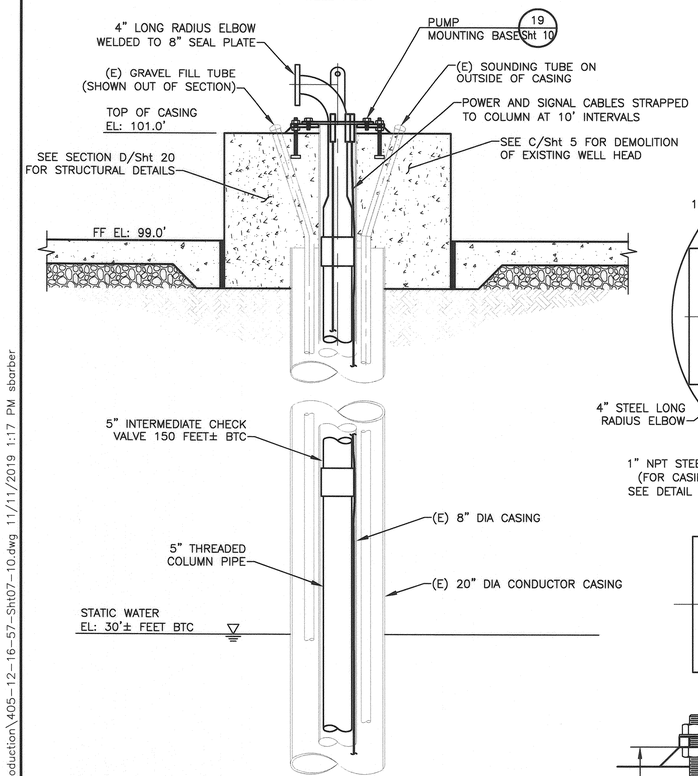

WELL MODIFICATIONS
DETAIL 1/Sht 7
NOT TO SCALE

WELL SECTION

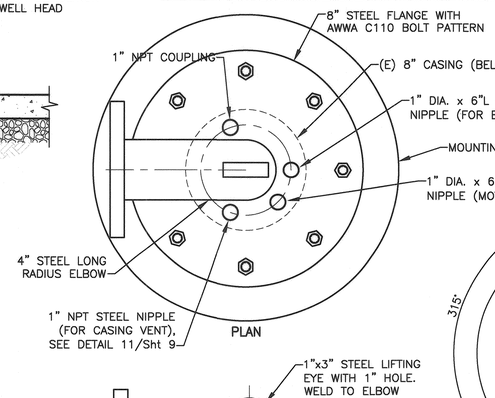

PLAN

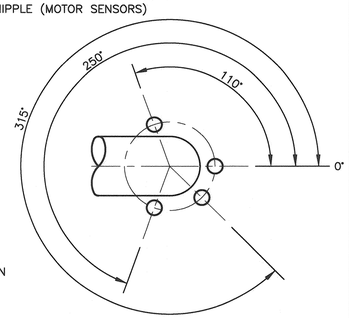

NIPPLE AND COUPLING LAYOUT

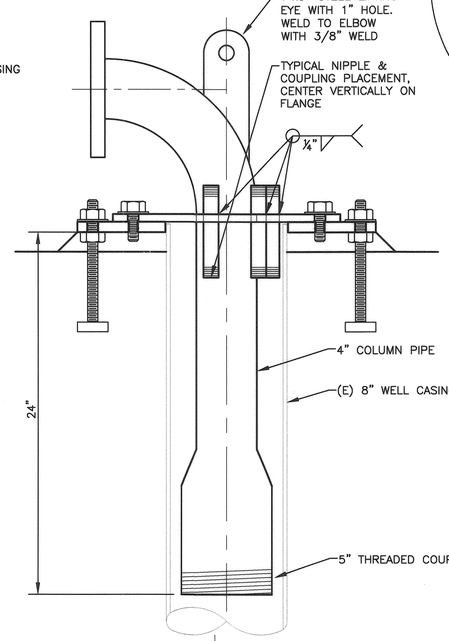

SECTION

SEAL PLATE DETAIL

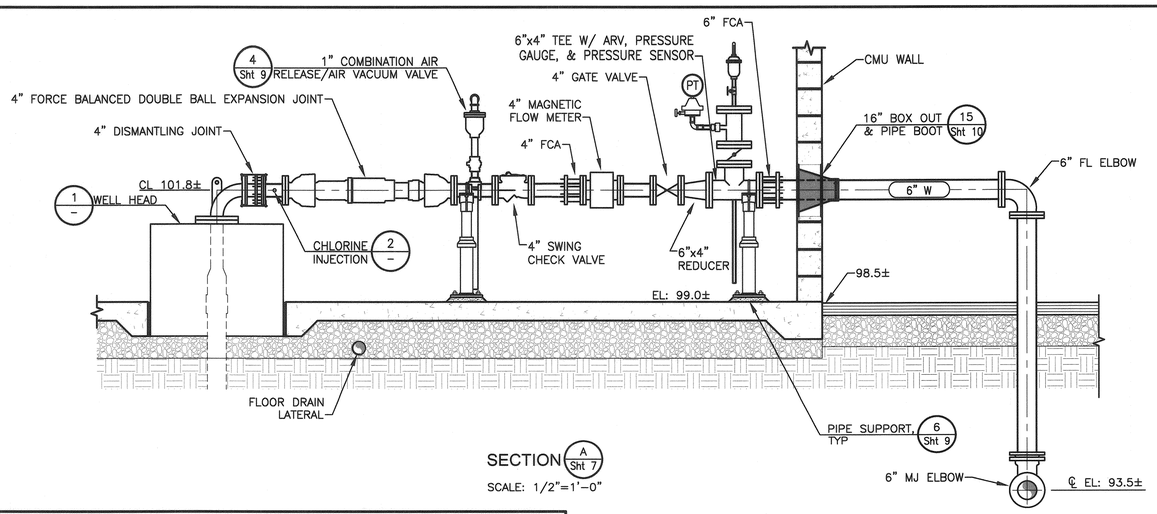

SECTION A/Sht 7
SCALE: 1/2"=1'-0"

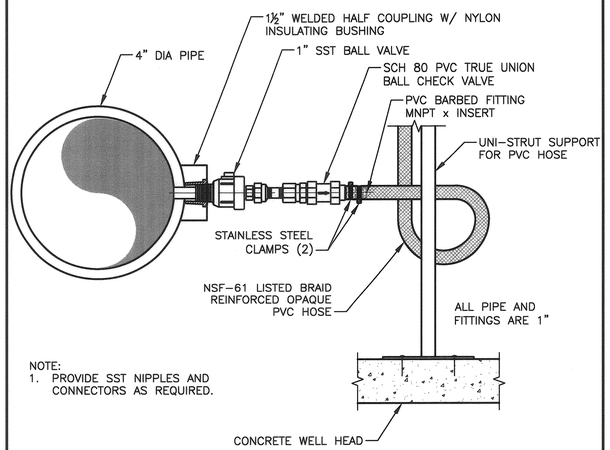

NOTE:
1. PROVIDE SST NIPPLES AND CONNECTORS AS REQUIRED.

CHLORINE INJECTOR
DETAIL 2/Sht 7
NOT TO SCALE

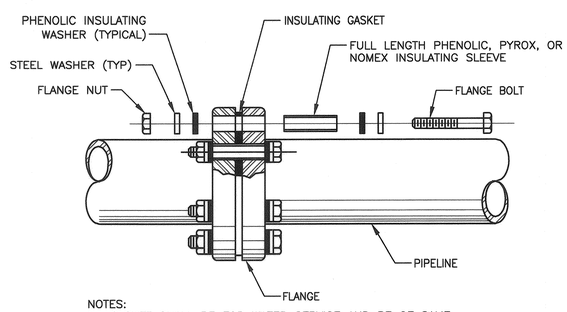

NOTES:
1. GASKET SHALL BE FOR WATER SERVICE AND BE OF SAME PRESSURE RATING AS THE FLANGE.
2. ALL BOLTS, NUTS & WASHERS SHALL BE LOW ALLOY HIGH STRENGTH.

ISOLATION FLANGE
DETAIL 3/Sht 7
NOT TO SCALE

NOTES

REGISTERED PROFESSIONAL ENGINEER
JAMES P. CONNELL
No. 63052
Exp. 6-30-20
CIVIL
STATE OF CALIFORNIA

City of Santa Rosa
Transportation & Public Works

NO.	DATE	REVISION	BY

SCALE: AS SHOWN
DWN BY: JRR
DATE: JANUARY, 2020
CHK BY: JPC

APPROVED: Deputy Director – Engineering
By _____ Date 1/24/20
Lori Urbanek, PE

CITY OF SANTA ROSA
EMERGENCY WELL 7

MECHANICAL SECTIONS AND DETAILS

CONTRACT NO. C01965
SHEET 8 OF 42
FILE NO. 2017-0023

EMERGENCY WELL 7

O:\Clients\405 City of Santa Rosa\12-16-57 Place-to-Play Well\CAD\Production\405-12-16-57-Sht07-10.dwg 11/11/2019 1:17 PM sbarber

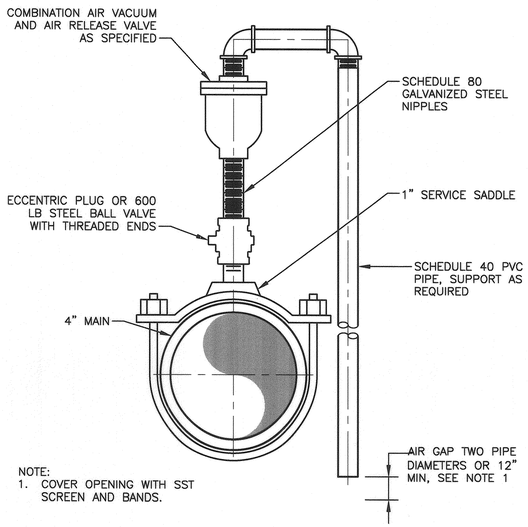

COMBINATION AIR RELEASE/AIR VACUUM VALVE

DETAIL 4 Sht 7

NOT TO SCALE

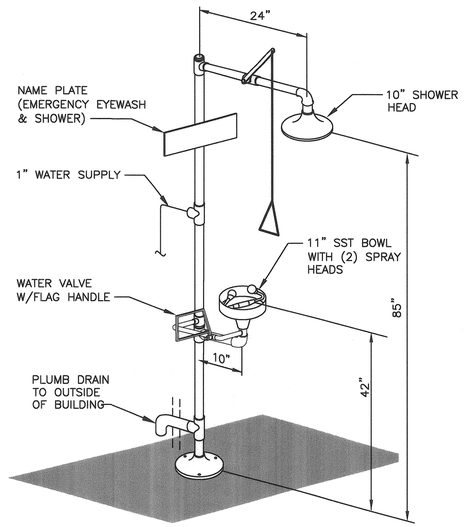

EMERGENCY EYEWASH AND SHOWER

DETAIL 5 Sht 7

NOT TO SCALE

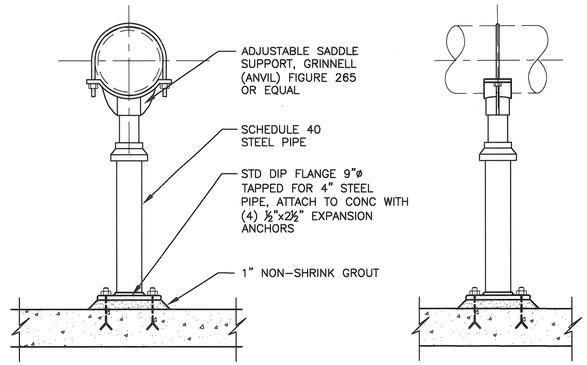

PIPE SUPPORT

DETAIL 6 VAR

NOT TO SCALE

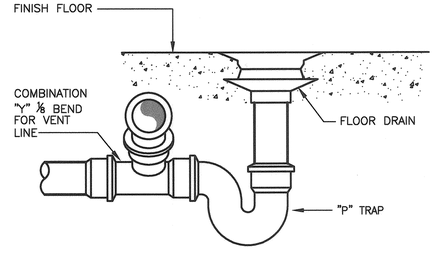

FLOOR DRAIN

DETAIL 7 Sht 7

NOT TO SCALE

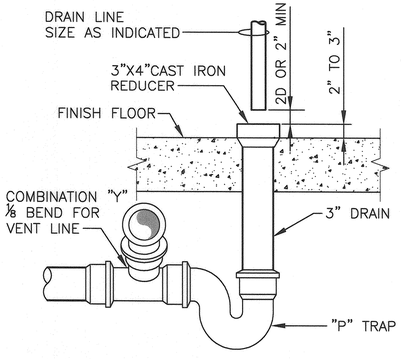

EQUIPMENT DRAIN (HUB)

DETAIL 8 Sht 7

NOT TO SCALE

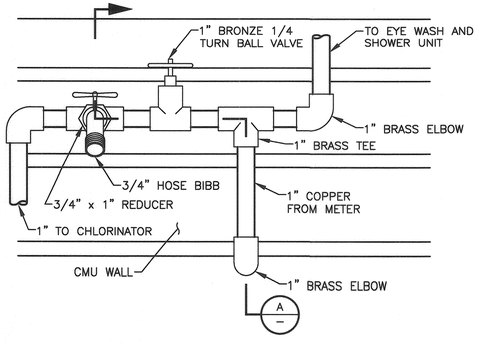

WATER SERVICE, HOSE BIB AND EYE WASH AND SHOWER CONNECTION SCHEMATIC

INSIDE ELEVATION 9 Sht 7

NOT TO SCALE

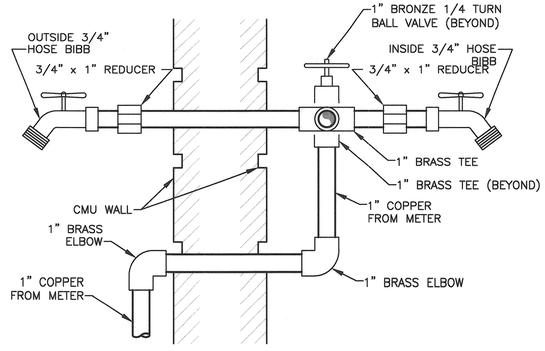

WATER SERVICE, HOSE BIB AND EYE WASH AND SHOWER CONNECTION SCHEMATIC

SECTION A –

NOT TO SCALE

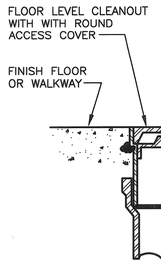

CLEANOUT

DETAIL 10 Sht 7

NOT TO SCALE

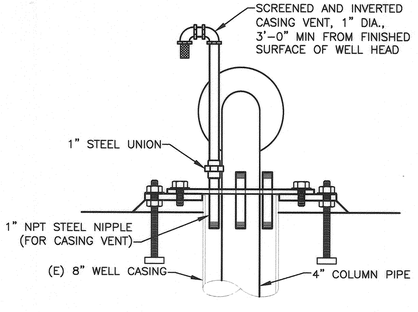

INVERTED CASING VENT

DETAIL 11 Sht 8

NOT TO SCALE

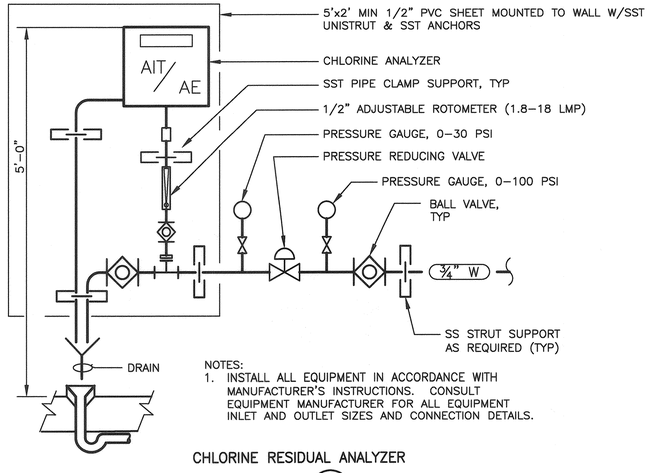

NOTES:
1. INSTALL ALL EQUIPMENT IN ACCORDANCE WITH MANUFACTURER'S INSTRUCTIONS. CONSULT EQUIPMENT MANUFACTURER FOR ALL EQUIPMENT INLET AND OUTLET SIZES AND CONNECTION DETAILS.

CHLORINE RESIDUAL ANALYZER

DETAIL 11A Sht 7

NOT TO SCALE

REGISTERED PROFESSIONAL ENGINEER JAMES P. CONNELL No. 63032 Exp. 6-30-20 CIVIL STATE OF CALIFORNIA

City of Santa Rosa
Transportation & Public Works

NO.	DATE	REVISION	BY

SCALE: AS SHOWN
DWN BY: JRR
DATE: JANUARY, 2020
CHK BY: JPC

APPROVED: *Deputy Director – Engineering*
Date 1/24/20
By
Lori Urbanek, PE

CITY OF SANTA ROSA
EMERGENCY WELL 7

MECHANICAL DETAILS 1

CONTRACT NO. C01965

SHEET 9 OF 42

FILE NO. 2017-0023

EMERGENCY WELL 7

O:\Clients\405 City of Santa Rosa\12-16-57 Place-to-Play Well\CAD\Production\405-12-16-57-Sht07-10.dwg 11/11/2019 1:17 PM sbarber

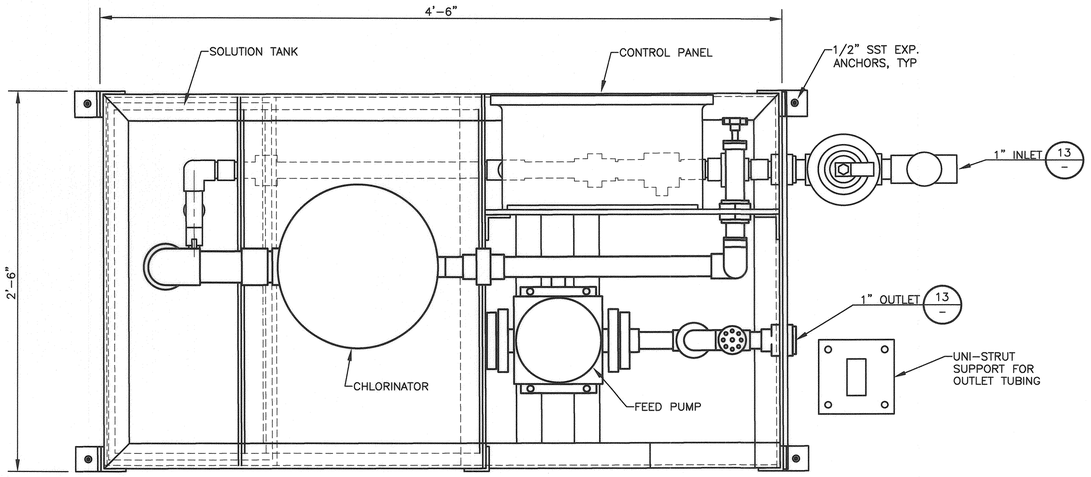

PRE-ASSEMBLED TABLET CHORINATOR

DETAIL 12 Sht 7

NOT TO SCALE

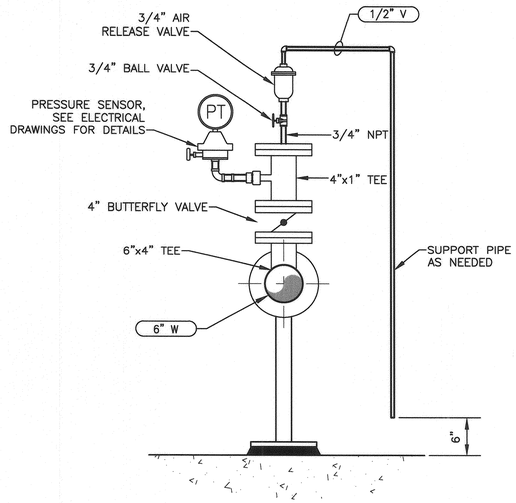

TEE WITH ARV AND PRESSURE SENSOR

DETAIL 14 SHT 7

NOT TO SCALE

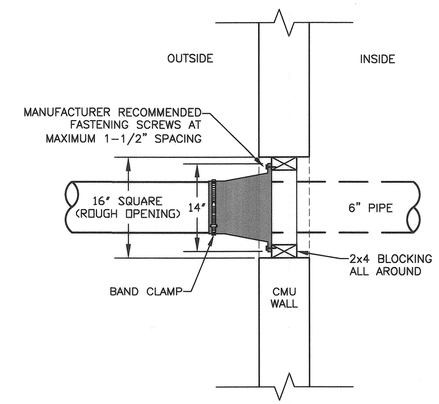

16" BOX OUT AND PIPE BOOT

DETAIL 15 SHT 7

NOT TO SCALE

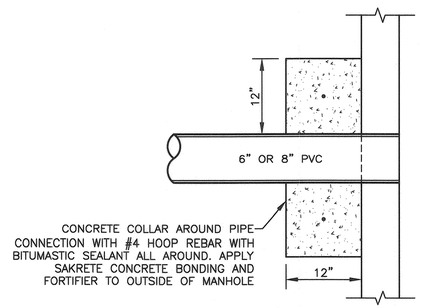

MANHOLE CONNECTION

DETAIL 16 SHT 4

NOT TO SCALE

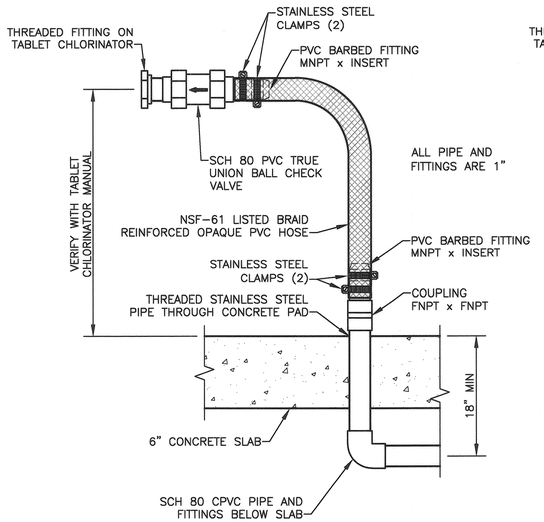

CHORINATOR INLET

DETAIL 13 Sht 7

NOT TO SCALE

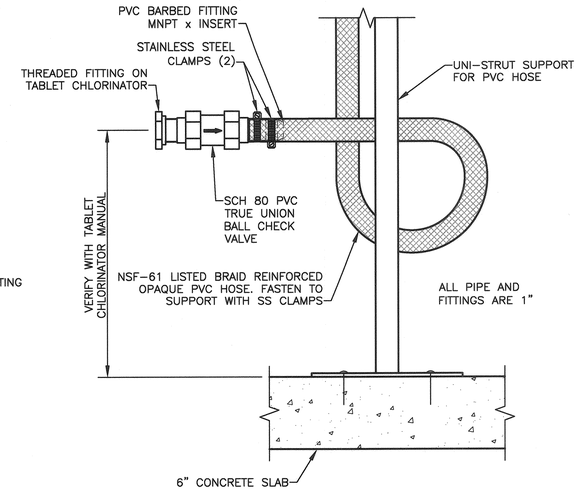

CHORINATOR OUTLET

DETAIL 18 Sht 7

NOT TO SCALE

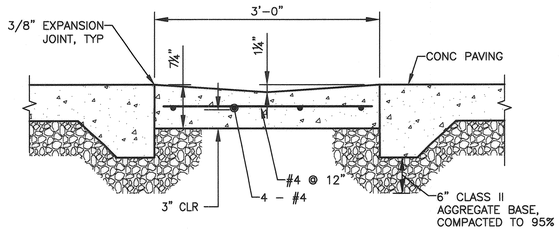

DRIVEWAY GUTTER

DETAIL 17 SHT 3

NOT TO SCALE

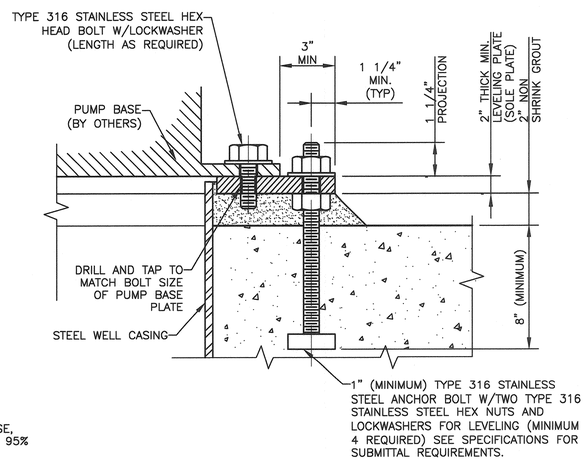

PUMP MOUNTING BASE

DETAIL 19 8

NOT TO SCALE

O:\Clients\405 City of Santa Rosa\12-16-57 Place-to-Play Well\CAD\Production\405-12-16-57-Sht07-10.dwg 11/11/2019 1:17 PM sborber

JAMES P. CONNELL No. 63652 Exp. 6-30-20 CIVIL STATE OF CALIFORNIA

City of Santa Rosa
Transportation & Public Works

NO.	DATE	REVISION	BY

DATE: JANUARY, 2020
CHK BY: JPC
SCALE: AS SHOWN
DWN BY: JRR

APPROVED: *Deputy Director - Engineering*
By *Lori Urbanek* Date 1/24/20
Lori Urbanek, PE

CITY OF SANTA ROSA
EMERGENCY WELL 7

MECHANICAL DETAILS 2

CONTRACT NO. C01965

SHEET 10 OF 42

FILE NO. 2017-0023

EMERGENCY WELL 7

SHEET NOTES:

1. SEE PROJECT SPECIFICATIONS FOR DOOR REQUIREMENTS AND SHEET 13 FOR DOOR DETAILS & DOOR SCHEDULE.
2. SEE SHEET 6 FOR CHAIN LINK FENCE AND GATE DETAILS

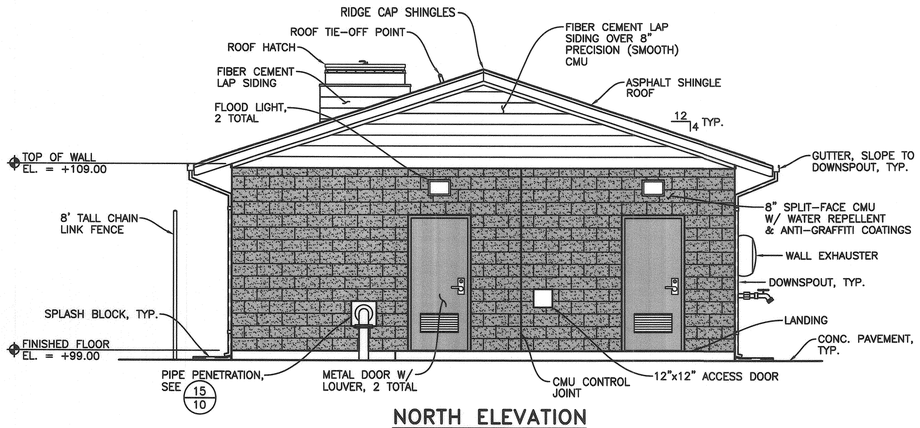

NORTH ELEVATION
1/4" = 1'-0"

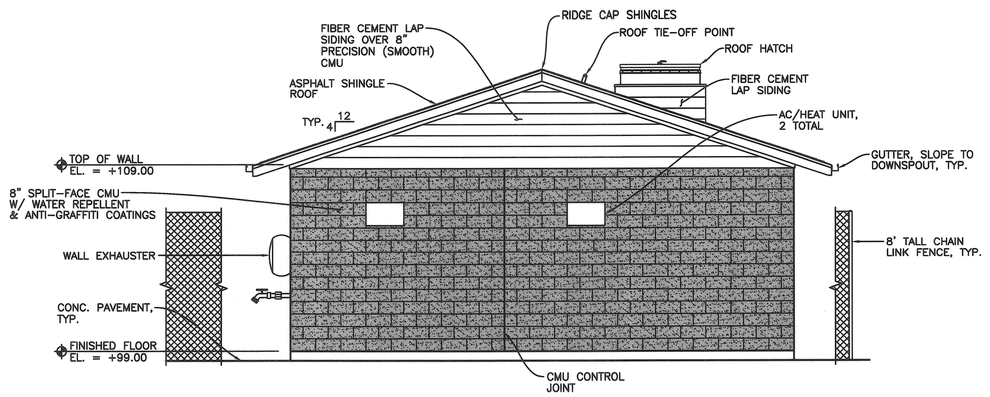

SOUTH ELEVATION
1/4" = 1'-0"

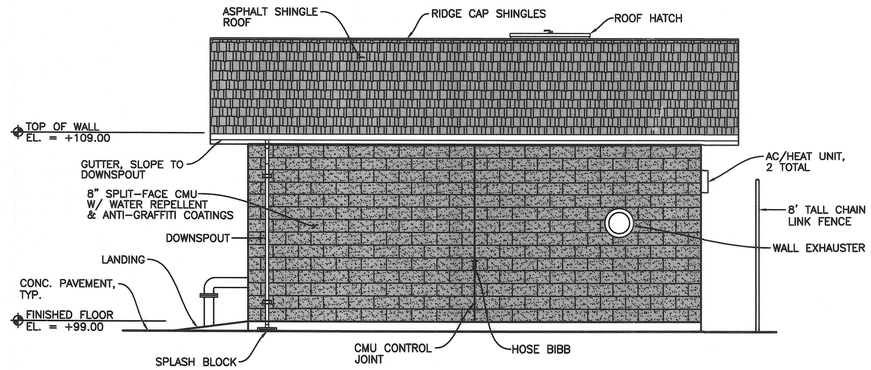

WEST ELEVATION
1/4" = 1'-0"

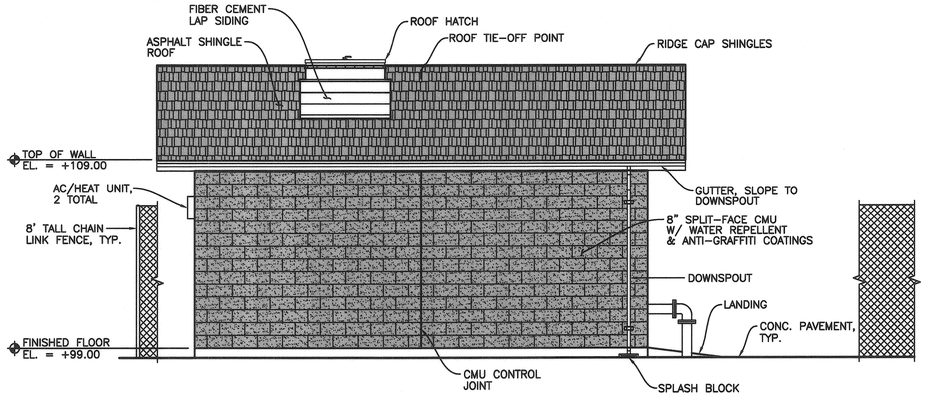

EAST ELEVATION
1/4" = 1'-0"

M:\1drawings\16-dwgs\16-130.1 A Place to Play Well CD\16-1301A1.dwg 11/22/2019 10:51 AM Ronald Moe

REGISTERED PROFESSIONAL ENGINEER
JEFFREY A. FINN
C 43928
S 3672
CIVIL & STRUCTURAL
STATE OF CALIFORNIA
12/2/19

City of Santa Rosa
Transportation & Public Works

NO.	DATE	REVISION	BY

DATE: JANUARY, 2020
CHK BY: TEE
SCALE: AS SHOWN
DWN BY: REM
APPROVED: Deputy Director - Engineering
By Lori Urbanek, PE Date 1/21/20

CITY OF SANTA ROSA
EMERGENCY WELL 7

ELEVATIONS

Finn Design Group, Inc.
Structural Engineers
3825 Hopyard Road, Suite 125
Pleasanton, CA 94588
OFFICE (925) 737-1600
FAX (925) 737-1601

CONTRACT NO. C01965
SHEET 11 OF 42
FILE NO. 2017-0023

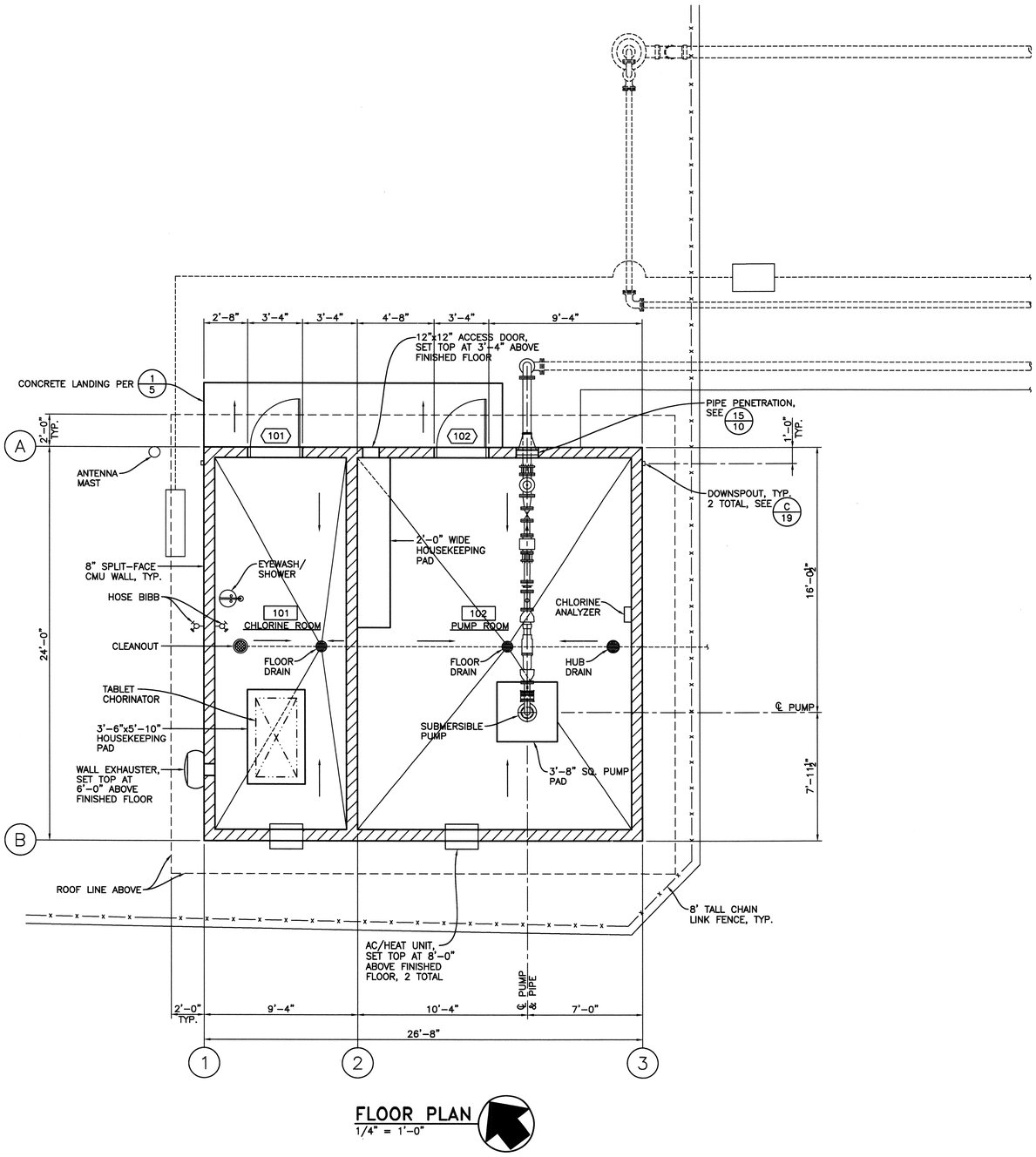

FLOOR PLAN

1/4" = 1'-0"

FLOOR PLAN NOTES:

1. SEE GENERAL NOTES & SPECIFICATIONS ON SHEET 14.
2. ALL DIMENSIONS ARE TO NOMINAL FACE OF MASONRY BLOCK OR TO FACE OF CONCRETE, U.N.O.
3. ▨ DENOTES MASONRY BLOCK WALL
4. ⟶ DENOTES DIRECTION OF CONCRETE SLAB SLOPE. SEE FOUNDATION PLAN ON SHEET 17 FOR TOP OF SLAB ELEVATIONS.
5. SEE SHEET 13 FOR ARCHITECTURAL FINISH SCHEDULE SHOWING INTERIOR FINISH REQUIREMENTS.
6. [101] ROOM NUMBER, SEE FINISH SCHEDULE ON SHEET 13.
7. ⟨101⟩ DOOR NUMBER, SEE DOOR SCHEDULE ON SHEET 13.

BUILDING CODE ANALYSIS[1]	
ITEM	VALUE
DESCRIPTION OF USE	POTABLE WATER PUMP STATION
OCCUPANCY GROUP	F-2
CONSTRUCTION TYPE	VB
SEPARATION	NO SEPARATION REQUIREMENT
NUMBER OF STORIES	1
ALLOWABLE NUMBER OF STORIES	2
BUILDING HEIGHT	16 FT.
ALLOWABLE BUILDING HEIGHT	40 FT.
BUILDING AREA	640 FT.[2]
ALLOWABLE BUILDING AREA	13,000 FT[2]
AUTOMATIC SPRINKLER SYSTEM	NOT REQUIRED[2]

NOTES:
1. CODE BASIS: 2016 CALIFORNIA BUILDING CODE (CBC).
2. AUTOMATIC FIRE SPRINKLERS ARE NOT REQUIRED PER CBC SECTION 903.2.4.

REGISTERED PROFESSIONAL ENGINEER
JEFFREY A. FINN
C 43928
S 3672
CIVIL & STRUCTURAL
STATE OF CALIFORNIA
12/2/19

City of Santa Rosa
Transportation & Public Works

NO.	DATE	REVISION	BY

DATE: JANUARY, 2020
CHK BY: TEE
SCALE: AS SHOWN
DWN BY: REM
APPROVED: *Deputy Director - Engineering*
By _____ Date 1/24/20
Lori Urbanek, PE

CITY OF SANTA ROSA
EMERGENCY WELL 7

FLOOR PLAN

CONTRACT NO. C01965
SHEET 12 OF 42
FILE NO. 2017-0023

Finn Design Group, Inc.
Structural Engineers
3825 Hopyard Road, Suite 125
Pleasanton, CA 94588
OFFICE (925) 737-1600
FAX (925) 737-1601

M:\1drawings\16-dwgs\16-130.1 A Place to Play Well CD\16-1301A2.dwg 11/22/2019 10:55 AM Ronald Moe

EMERGENCY WELL 7

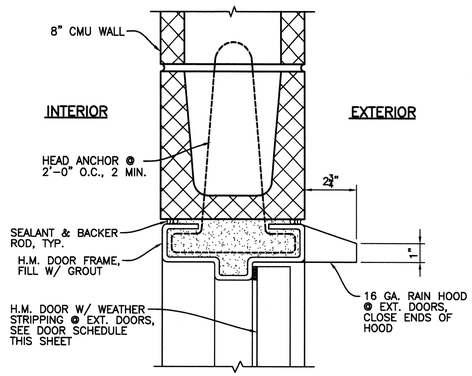

HOLLOW METAL DOOR HEAD

DETAIL 1/13 — 3" = 1'-0"

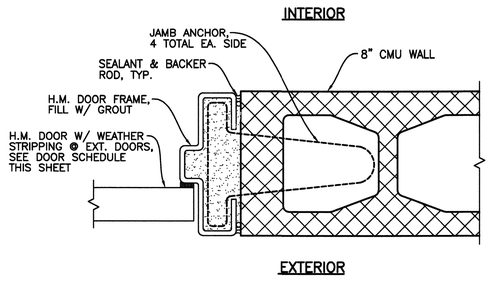

HOLLOW METAL DOOR JAMB

DETAIL 2/13 — 3" = 1'-0"

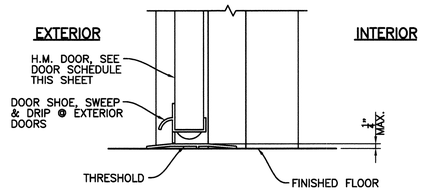

HOLLOW METAL DOOR SILL

DETAIL 3/13 — 3" = 1'-0"

ARCHITECTURAL FINISH SCHEDULE

SPACE		FLOOR			WALLS			CEILING			
NO.	ROOM	MATERIAL	FINISH	COATING	MATERIAL	FINISH	COLOR	HEIGHT	MATERIAL	FINISH	COLOR
101	CHLORINE ROOM	CONCRETE	STEEL TROWEL	EPOXY SEALER (1)	MASONRY	PAINT	SEE SPECS	10'-3"	5/8" GYPBOARD	PAINT	SEE SPECS
102	PUMP ROOM	CONCRETE	STEEL TROWEL	EPOXY SEALER (1)	MASONRY	PAINT	SEE SPECS	10'-3"	5/8" GYPBOARD	PAINT	SEE SPECS

FINISH NOTES:
1. EPOXY SEALER PER PROJECT SPECIFICATIONS.

DOOR SCHEDULE

DOOR						FRAME		REMARKS
DR. NO.	ROOM	TYPE	MTL.	SIZE	DOOR HARDWARE TYPE (1)	MTL.	SIZE	
101	CHLORINE ROOM	(A)	H.M.	3'-0"x7'-2"	A	H.M.	2"x6"	PROVIDE LOUVER
102	PUMP ROOM	(A)	H.M.	3'-0"x7'-2"	A	H.M.	2"x6"	PROVIDE LOUVER

DOOR NOTES:
1. DOOR HARDWARE TYPE PER PROJECT SPECIFICATIONS.

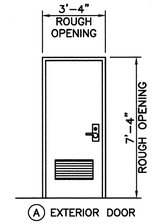

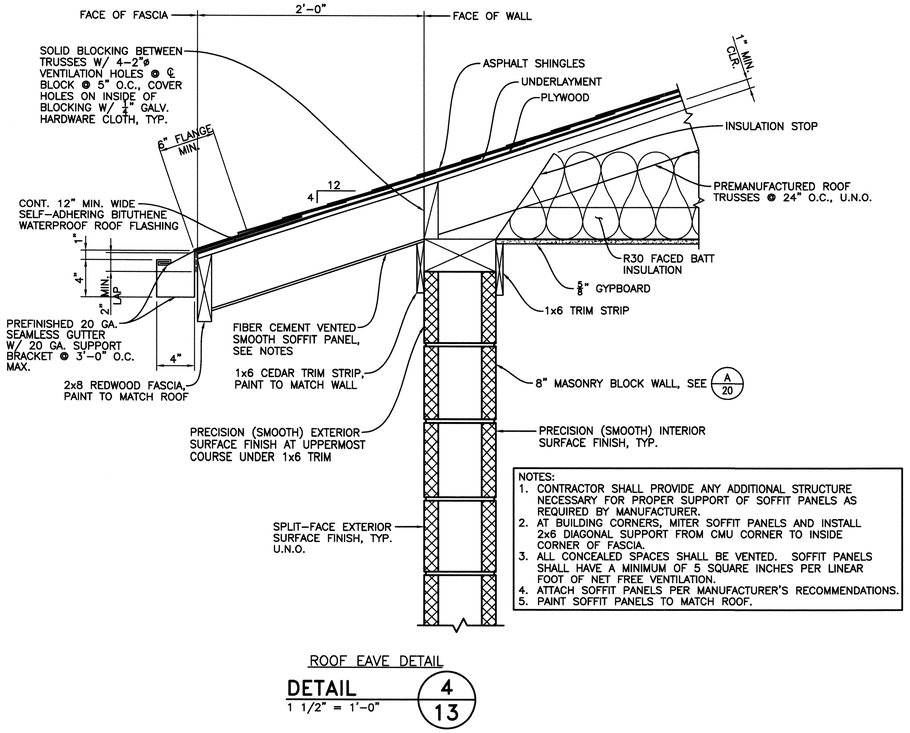

NOTES:
1. CONTRACTOR SHALL PROVIDE ANY ADDITIONAL STRUCTURE NECESSARY FOR PROPER SUPPORT OF SOFFIT PANELS AS REQUIRED BY MANUFACTURER.
2. AT BUILDING CORNERS, MITER SOFFIT PANELS AND INSTALL 2x6 DIAGONAL SUPPORT FROM CMU CORNER TO INSIDE CORNER OF FASCIA.
3. ALL CONCEALED SPACES SHALL BE VENTED. SOFFIT PANELS SHALL HAVE A MINIMUM OF 5 SQUARE INCHES PER LINEAR FOOT OF NET FREE VENTILATION.
4. ATTACH SOFFIT PANELS PER MANUFACTURER'S RECOMMENDATIONS.
5. PAINT SOFFIT PANELS TO MATCH ROOF.

ROOF EAVE DETAIL

DETAIL 4/13 — 1 1/2" = 1'-0"

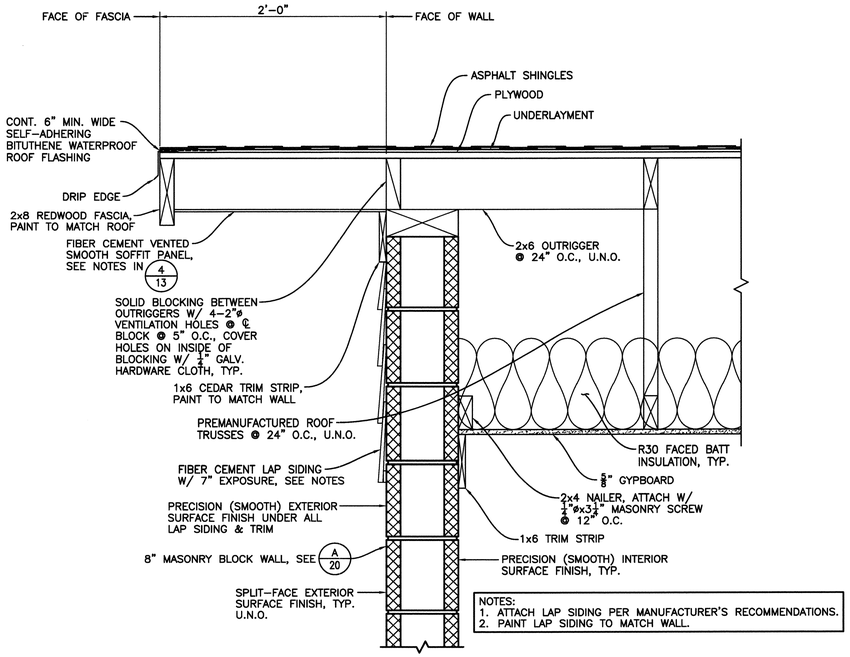

NOTES:
1. ATTACH LAP SIDING PER MANUFACTURER'S RECOMMENDATIONS.
2. PAINT LAP SIDING TO MATCH WALL.

ROOF RAKE DETAIL

DETAIL 5/13 — 1 1/2" = 1'-0"

REGISTERED PROFESSIONAL ENGINEER
JEFFREY A. FINN
C 43928
S 3872
CIVIL & STRUCTURAL
STATE OF CALIFORNIA
12/2/19

City of Santa Rosa
Transportation & Public Works

NO.	DATE	REVISION	BY

DATE: JANUARY, 2020
CHK BY: TEE
SCALE: AS SHOWN
DWN BY: REM
APPROVED: Deputy Director - Engineering
By Lori Urbanek, PE Date 1/24/20

CITY OF SANTA ROSA
EMERGENCY WELL 7

ARCHITECTURAL DETAILS & SCHEDULES

CONTRACT NO. C01965
SHEET 13 OF 42
FILE NO. 2017-0023

Finn Design Group, Inc.
Structural Engineers
3825 Hopyard Road, Suite 125
Pleasanton, CA 94588
OFFICE (925) 737-1600
FAX (925) 737-1601

M:\1drawings\16-dwgs\16-130.1 A Place to Play Well CD\16-1301A3.dwg 11/22/2019 11:06 AM Ronald Moe

EMERGENCY WELL 7

GENERAL

1. BASIS OF DESIGN: 2016 CALIFORNIA BUILDING CODE.
2. THESE DRAWINGS SHALL BE USED IN CONJUCTION WITH THE SEPARATELY BOUND PROJECT SPECIFICATIONS.
3. ALL MATERIALS, WORKMANSHIP, TESTING AND INSPECTION SHALL CONFORM TO THE CALIFORNIA BUILDING CODE, 2016 EDITION, AND LOCAL BUILDING CODES.
4. THE CONTRACTOR SHALL VERIFY ALL DIMENSIONS AND EXISTING CONDITIONS ON THE JOBSITE WITH A COMPLETE SET OF THE LATEST DRAWINGS. OMISSIONS OR DISCREPANCIES BETWEEN THE VARIOUS ELEMENTS OF THE CONTRACT DOCUMENTS SHALL BE BROUGHT TO THE ATTENTION OF THE ENGINEER BEFORE PROCEEDING WITH WORK.
5. DETAILS SHOWN ARE TYPICAL, AND APPLY TO SIMILAR CONDITIONS, UNLESS NOTED OTHERWISE.
6. THE CONTRACTOR SHALL BE RESPONSIBLE FOR JOBSITE SAFETY, INCLUDING SAFETY OF THE BUILDING AND ALL EXISTING UTILITIES. THE CONTRACTOR SHALL PROVIDE ADEQUATE SHORING, BRACING, AND GUYS IN ACCORDANCE WITH ALL NATIONAL, STATE AND LOCAL ORDINANCES.
7. DRAWINGS SHALL NOT BE SCALED OR MEASURED FOR DIMENSIONS.
8. SPECIAL INSPECTION SHALL BE PROVIDED AS REQUIRED BY THE STATEMENT OF SPECIAL INSPECTIONS ON SHEET 15.

FOUNDATION

1. FOUNDATION DESIGN IS BASED ON GEOTECHNICAL INVESTIGATION REPORT PREPARED BY RGH CONSULTANTS, DATED AUGUST 5, 2016, PROJECT NO. 5383.06.04.1.
2. FOOTING DESIGN CAPACITIES:
   DEAD + LIVE LOAD BEARING PRESSURE: 3,000 PSF
   DEAD + WIND / SEISMIC BEARING PRESSURE: 4,000 PSF
3. SIDES OF FOOTINGS SHOWN STRAIGHT ARE FORMED. IF SITE CONDITION ALLOWS AND GEOTECHNICAL ENGINEER CONCURS, SIDES OF FOOTINGS MAY BE FORMED OR NOT FORMED AT CONTRACTOR'S OPTION. FOOTINGS CAST DIRECTLY AGAINST EARTH REQUIRE THE FOLLOWING PRECAUTIONS; A) SLOPE SIDES OF EXCAVATIONS AS APPROVED BY THE GEOTECHNICAL ENGINEER, B) CLEAN UP OF SLOUGHING BEFORE, DURING AND AFTER PLACING CONCRETE, C) ADEQUATE COVER MUST BE PROVIDED FOR ALL REBAR. ADD 1" TO ALL SIDES OF FOOTING DIMENSIONS WHICH ARE CAST AGAINST EARTH.

CONCRETE

1. ALL CONCRETE SHALL BE MIXED AND PLACED IN ACCORDANCE WITH ACI 318-14. USE MIXES WITH MAXIMUM AGGREGATE SIZE APPROPRIATE FOR FORM REBAR CLEARANCES TO BE ENCOUNTERED (SEE A.C.I.)
2. THE PROPOSED MATERIALS AND MIX DESIGN SHALL BE FULLY DOCUMENTED BY THE CONTRACTOR AND REVIEWED BY THE CITY'S TESTING LABORATORY. IT IS THE CONTRACTOR'S RESPONSIBILITY TO OBTAIN THE REQUIRED DESIGN STRENGTH. SUBMITTAL DATA FROM 30 PREVIOUS COMPRESSION TESTS ON EACH PROPOSED MIX WILL BE REQUIRED FOR REVIEW BEFORE MIX CAN BE APPROVED.
3. ALL CONCRETE SHALL HAVE THE FOLLOWING MINIMUM 28-DAY STRENGTHS, U.N.O.
   STRUCTURE FOOTINGS, SLABS, AND WALLS 4,000 PSI
   MISCELLANEOUS SITE CONCRETE 3,000 PSI
4. SCHEDULING OF WORK MAY REQUIRE DESIGN STRENGTH TO BE ACHIEVED IN LESS THAN 28 DAYS. CONTRACTOR SHALL COORDINATE MIX DESIGN AND CONCRETE CYLINDER BREAKS WITH THE CITY'S TESTING LABORATORY.
5. CONSTRUCTION JOINTS SHALL BE INTENTIONALLY ROUGHENED BY SAND BLASTING OR MECHANICAL MEANS AND CLEANED BEFORE NEW POUR. LOCATIONS SHALL BE AS SHOWN OR APPROVED IN WRITING BY THE STRUCTURAL ENGINEER.
6. BACKFILLING OF BELOW-GRADE WALLS SHALL NOT BEGIN UNTIL THE CONCRETE HAS REACHED ITS REQUIRED DESIGN STRENGTH.

CONCRETE UNIT MASONRY

1. ALL CONCRETE UNIT MASONRY SHALL BE LIGHTWEIGHT AND SHALL BE GROUTED SOLID.
2. MASONRY UNIT DESIGN STRENGTH f'm = 1,500 PSI.
3. THE PROPOSED MATERIALS AND GROUT AND MORTAR MIX DESIGNS SHALL BE FULLY DOCUMENTED BY THE CONTRACTOR AND REVIEWED BY THE CITY'S TESTING LABORATORY. IT IS THE CONTRACTOR'S RESPONSIBILITY TO OBTAIN THE REQUIRED STRENGTH.
4. VERIFICATION OF f'm SHALL BE BY MEANS OF THE UNIT STRENGTH METHOD AS OUTLINED IN CBC SECTION 2105.2.2.1.

REINFORCING STEEL

1. REINFORCING STEEL SHALL BE ASTM A615, GRADE 60 DEFORMED BARS, U.N.O. REINFORCING STEEL TO BE WELDED SHALL BE ASTM A706.
2. ALL REINFORCING STEEL AND EMBEDMENTS TO BE HELD SECURELY IN PLACE PRIOR TO PLACING CONCRETE. PROVIDE SUFFICIENT SUPPORTS TO ALLOW WALKING ON REINFORCEMENT.
3. WELDING OF REINFORCING IS PROHIBITED UNLESS EXPLICITLY SHOWN ON THE DRAWINGS OR APPROVED IN WRITING BY THE STRUCTURAL ENGINEER.
4. PROVIDE CONTINUOUS REINFORCEMENT WHEREVER POSSIBLE, PLACE ONLY AS SHOWN OR APPROVED, STAGGER SPLICES WHERE POSSIBLE.

DEFERRED SUBMITTALS/SHOP DRAWINGS

THE FOLLOWING ITEMS SHALL BE SUBMITTED TO THE ENGINEER FOR REVIEW:
1. CONCRETE MIX DESIGNS.
2. UNIT MASONRY SHOP DRAWINGS, GROUT MIX DESIGNS AND CERTIFICATIONS OF COMPLIANCE.
3. BAR REINFORCING STEEL SHOP DRAWINGS.
4. STRUCTURAL STEEL & MISCELLANEOUS METAL SHOP DRAWINGS.
5. WELDING PROCEDURE SPECIFICATIONS, WELDING ELECTRODE DATA, & WELDER QUALIFICATIONS.
6. PREFABRICATED WOOD ROOF TRUSS SHOP DRAWINGS.
7. ANCHORAGE OF PUMP, TABLET CHLORINATOR, AND ELECTRICAL/CONTROL EQUIPMENT.

STRUCTURAL DESIGN PARAMETERS

DESIGN DEAD LOADS:
   A. ROOF LOAD 15 PSF

DESIGN LIVE LOADS:
   A. ROOF LOAD 20 PSF

DESIGN WIND LOADS – MAIN WIND FORCE RESISTING SYSTEM (MWFRS):
   BASIC WIND SPEED 115 MPH
   EXPOSURE CATEGORY C

DESIGN EARTHQUAKE LOADS:
   SITE CLASS D
   SEISMIC IMPORTANCE FACTOR, I 1.50
   MAPPED SPECTRAL RESPONSE ACCELERATIONS:
      S_S 1.686g
      S_1 0.666g
   SPECTRAL RESPONSE COEFFICIENTS:
      S_{DS} 1.124g
      S_{D1} 0.666g
   SEISMIC DESIGN CATEGORY, SDC D
   BASIC SEISMIC FORCE RESISTING SYSTEM:
      SPECIAL REINFORCED MASONRY SHEARWALLS
   RESPONSE MODIFICATION FACTOR, R 5.00
   SEISMIC RESPONSE COEFFICIENT/DESIGN BASE SHEAR 0.337W (STRENGTH LEVEL)

ABBREVIATIONS

&	AND	GMU	GLASS MASONRY UNIT
@	AT	HDR.	HEADER
ø	DIAMETER	HGRS.	HANGERS
#	NUMBER	H.S.B.	HIGH STRENGTH BOLTS
A.B.	ANCHOR BOLT	H.M.	HOLLOW METAL
ARCH.	ARCHITECT	HORIZ.	HORIZONTAL
BM.	BEAM	HT.	HEIGHT
BRG.	BEARING	INT.	INTERIOR
BLKG.	BLOCKING	JST.	JOIST
BOTT.	BOTTOM	LDGR.	LEDGER
BNDY.	BOUNDARY	LL	LIVE LOAD
CAM	CAMBER UP	LLH	LONG LEG HORIZONTAL
C.J.	CEILING JOIST	LLV	LONG LEG VERTICAL
CLG.	CEILING	MAX.	MAXIMUM
℄	CENTERLINE	M.B.	MACHINE BOLTS
CLR.	CLEAR	MECH.	MECHANICAL
COL.	COLUMN	MIN.	MINIMUM
CJP	COMPLETE JOINT PENETRATION	N/A	NOT APPLICABLE
		NTS	NOT TO SCALE
CONN.	CONNECTION	O.C.	ON CENTER
CONC.	CONCRETE	O.H.	OPPOSITE HAND
CONST.	CONSTRUCTION	PJP	PARTIAL JOINT PENETRATION
CMU	CONCRETE MASONRY UNIT		
CONT.	CONTINUOUS	PL	PLATE
DBL.	DOUBLE	REINF.	REINFORCEMENT
DP.	DEEP	R.R.	ROOF RAFTER
EA.	EACH	S.A.D.	SEE ARCHITECTURAL DRAWINGS
E.N.	EDGE NAILING	SHT.	SHEET
ELEC.	ELECTRICAL	S.M.S.	SHEET METAL SCREW
EL.	ELEVATION	SHTG.	SHEATHING
ELEV.	ELEVATION	SIM.	SIMILAR
EMBED.	EMBEDMENT	S.O.G.	SLAB ON GRADE
EQ.	EQUAL	SPECS.	SPECIFICATIONS
EXT.	EXTERIOR	SQ.	SQUARE
FLR.	FLOOR	STD.	STANDARD
FDN.	FOUNDATION	THK.	THICK
FRP	FIBERGLASS REINFORCED PLASTIC	THD.	THREADED
		T.O.C.	TOP OF CONCRETE
FTG.	FOOTING	T.O.S.	TOP OF STEEL
F.H.	FULL HEIGHT	T&B	TOP & BOTTOM
F.J.	FLOOR JOIST	TYP.	TYPICAL
GA.	GAGE	U.N.O.	UNLESS NOTED OTHERWISE
GALV.	GALVANIZED	VERT.	VERTICAL
G.S.M.	GALVANIZED SHEET METAL	W/	WITH

REGISTERED PROFESSIONAL ENGINEER
JEFFREY A. FINN
C 43928
S 3672
CIVIL & STRUCTURAL
STATE OF CALIFORNIA
12/2/19

City of Santa Rosa
Transportation & Public Works

NO.	DATE	REVISION	BY

DATE: JANUARY, 2020
CHK BY: TEE
SCALE: AS SHOWN
DWN BY: REM

APPROVED: *Deputy Director – Engineering*
By _____ Date 1/24/20
Lori Urbanek, PE

CITY OF SANTA ROSA
EMERGENCY WELL 7

GENERAL NOTES & SPECIFICATIONS

CONTRACT NO. C01965
SHEET 14 OF 42
FILE NO. 2017-0023

Finn Design Group, Inc.
Structural Engineers
3825 Hopyard Road, Suite 125
Pleasanton, CA 94588
OFFICE (925) 737-1600
FAX (925) 737-1601

EMERGENCY WELL 7

M:\1drawings\16-dwgs\16-130.1 A Place to Play Well CD\16-1301S1.dwg 11/18/2019 11:54 AM Ronald Moe

STATEMENT OF SPECIAL INSPECTIONS

SPECIAL INSPECTION
- INSPECTION OF THE MATERIALS, INSTALLATION, FABRICATION, ERECTION OR PLACEMENT OF COMPONENTS AND CONNECTIONS REQUIRING SPECIAL EXPERTISE TO ENSURE COMPLIANCE WITH THE APPROVED CONSTRUCTION DOCUMENTS AND THE 2016 CALIFORNIA BUILDING CODE (CBC). THIS 6IS IN ADDITION TO THOSE REQUIRED BY SECTION 110, CHAPTER 1 OF THE 2016 CBC.

SPECIAL INSPECTOR
- THE SPECIAL INSPECTOR SHALL BE A QUALIFIED PERSON WHO SHALL DEMONSTRATE COMPETENCE, TO THE SATISFACTION OF THE BUILDING OFFICIAL, FOR INSPECTION OF THE PARTICULAR TYPE OF CONSTRUCTION OR OPERATION REQUIRING SPECIAL INSPECTION.

DUTIES AND RESPONSIBILITIES OF THE SPECIAL INSPECTOR
- THE SPECIAL INSPECTOR SHALL INSPECT THE WORK ASSIGNED FOR CONFORMANCE WITH THE APPROVED DESIGN DRAWINGS AND SPECIFICATIONS.
- SPECIAL INSPECTORS SHALL KEEP RECORDS OF ALL INSPECTIONS. THE SPECIAL INSPECTOR SHALL FURNISH INSPECTION REPORTS TO THE BUILDING OFFICIAL, THE ENGINEER OR ARCHITECT OF RECORD, AND OTHER DESIGNATED PERSONS. REPORTS SHALL INDICATE THAT WORK INSPECTED WAS DONE IN CONFORMANCE TO APPROVED CONSTRUCTION DOCUMENTS. DISCREPANCIES SHALL BE BROUGHT TO THE IMMEDIATE ATTENTION OF THE CONTRACTOR FOR CORRECTION, THEN IF UNCORRECTED, TO THE ATTENTION OF THE BUILDING OFFICIAL AND ENGINEER OR ARCHITECT OF RECORD.
- THE SPECIAL INSPECTOR SHALL SUBMIT A FINAL SIGNED REPORT STATING WHETHER THE WORK REQUIRING SPECIAL INSPECTION WAS, TO THE BEST OF THE INSPECTOR'S KNOWLEDGE, IN CONFORMANCE WITH THE APPROVED PLANS AND SPECIFICATIONS AND THE APPLICABLE WORKMANSHIP PROVISIONS OF THE CODE.

CONTRACTOR STATEMENT OF RESPONSIBILITY
- PRIOR TO COMMENCEMENT OF WORK, THE CONTRACTOR SHALL SUBMIT A WRITTEN STATEMENT OF RESPONSIBILITY TO THE BUILDING OFFICIAL AND THE OWNER IN CONFORMANCE WITH SECTION 1704.4 OF THE 2016 CBC.

REQUIRED SPECIAL INSPECTIONS
- ITEMS REQUIRING SPECIAL INSPECTION SHALL BE AS FOLLOWS:

REQUIRED SPECIAL INSPECTIONS AND TESTS OF STRUCTURAL MASONRY (LEVEL C)

TYPE	FREQUENCY OF INSPECTION		REFERENCE FOR CRITERIA	
	CONTINUOUS SPECIAL INSPECTION[1]	PERIODIC SPECIAL INSPECTION[1]	TMS 402/ ACI 530/ ASCE 5[2]	TMS 602/ ACI 530.1/ ASCE 6[2]
1. Verify compliance with the approved submittals	–	X	–	Art. 1.5
2. Verify that the following are in compliance:				
a. Proportions of site–mixed mortar, grout and prestressing grout for bonded tendons	–	X	–	Art. 2.1, 2.6A 2.6B, 2.6C, 2.4G.1.b
b. Grade, type, and size of reinforcement and anchor bolts, and prestressing tendons and anchorages	–	X	Sec. 6.1	Art. 2.4, 3.4
c. Placement of masonry units and construction of mortar joints	–	X	–	Art. 3.3B
d. Placement of reinforcement, connectors, and prestressing tendons and anchorages	X	–	Sec. 6.1, 6.2.1, 6.2.6, 6.2.7	Art. 3.2E, 3.4, 3.6A
e. Grout space prior to grouting	X	–	–	Art. 3.2D, 3.2F
f. Placement of grout and prestressing grout for bonded tendons	X	–	–	Art. 3.5, 3.6C
g. Size and location of structural elements	–	X	–	Art. 3.3F
h. Type, size, and location of anchors, including other details of anchorage of masonry to structural members, frames, or other construction	X	–	Sec. 1.2.1(e), 6.1.4.3, 6.2.1	–
i. Welding of reinforcement	X	–	Sec. 8.1.6.7.2, 9.3.3.4(c), 11.3.3.4(b)	–
j. Preparation, construction, and protection of masonry during cold weather (temperature below 40°F (4.4°C)) or hot weather (temperature above 90°F (32.2°))	–	X	–	Art. 1.8C, 1.8D
k. Application and measurement of prestressing force.	X	–	–	Art. 3.6B
l. Placement of AAC masonry units and construction of thin–bed mortar joints	X	–	–	Art. 3.3B.9, 3.3F.1.b
m. Properties of thin–bed mortar for AAC masonry	X	–	–	Art. 2.1C.1
3. Observe preparation of grout specimens, mortar specimens, and/or prisms	X	–	–	Art. 1.4B.2.a.3, 1.4B.2.b.3, 1.4B.2.c.3, 1.4B.3, 1.4B.4

1. Refer to CBC Section 202 for definition of continuous and periodic inspections.
2. The specific standards referenced are those listed in CBC Chapter 35.

REQUIRED SPECIAL INSPECTIONS AND TESTS OF CONCRETE CONSTRUCTION

TYPE	CONTINUOUS SPECIAL INSPECTION[1]	PERIODIC SPECIAL INSPECTION[1]	REFERENCED STANDARD[2]	CBC SECTION
1. Inspect reinforcement, including prestressing tendons, and verify placement.	–	X	ACI 318: 20, 25.2, 25.3, 26.5.1–26.5.3	1908.4
2. Reinforcing bar welding:				
a. Verify weldability of reinforcing bars other than ASTM A706;	–	X	AWS D1.4 ACI 318: 26.5.4	–
b. Inspect single–pass fillet welds, maximum 5/16"; and	–	X		
c. Inspect all other welds.	X	–		
3. Inspect anchors cast in concrete.	–	X	ACI 318: 17.8.2	–
4. Inspect anchors post–installed in hardened concrete members.[3]				
a. Adhesive anchors installed in horizontally or upwardly inclined orientations to resist sustained tension loads	X	–	ACI 318: 17.8.2.4	–
b. Mechanical anchors and adhesive anchors not defined in 4.a.	–	X	ACI 318: 17.8.2	
5. Verify use of required design mix.	–	X	ACI 318: 19, 26.4.3, 26.4.4	1904.1, 1904.2, 1908.2, 1908.3
6. Prior to concrete placement, fabricate specimens for strength tests, perform slump and air content tests, and determine the temperature of the concrete.	X	–	ASTM C172 ASTM C31 ACI 318: 26.4.5, 26.12	1908.10
7. Inspect concrete and shotcrete placement for proper application techniques.	X	–	ACI 318: 26.4.5	1908.6, 1908.7, 1908.8
8. Verify maintenance of specified curing temperature and techniques.	–	X	ACI 318: 26.4.7–26.4.9	1908.9
9. Inspect prestressed concrete for:				
a. Application of prestressing forces; and	X	–	ACI 318: 26.9.2.1	–
b. Grouting of bonded prestressing tendons.	X	–	ACI 318: 26.9.2.3	
10. Inspect erection of precast concrete members.	–	X	ACI 318: 26.8	–
11. Verify in–situ concrete strength, prior to stressing of tendons in post–tensioned concrete and prior to removal of shores and forms from beams and structural slabs.	–	X	ACI 318: 26.10.2	–
12. Inspect formwork for shape, location and dimensions of the concrete member being formed.	–	X	ACI 318: 26.10.1(b)	–

1. Refer to CBC Section 202 for definition of continuous and periodic inspections.
2. Where applicable, see also CBC Section 1705.12, Special inspections for seismic resistance.
3. Specific requirements for special inspection shall be included in the research report for the anchor issued by an approved source in accordance with 17.8.2 in ACI 318, or other qualification procedures. Where specific requirements are not provided, special inspection requirements shall be specified by the registered design professional and shall be approved by the building official prior to the commencement of the work.

REQUIRED SPECIAL INSPECTIONS AND TESTS OF SOILS

TYPE	CONTINUOUS SPECIAL INSPECTION[1]	PERIODIC SPECIAL INSPECTION[1]
1. Verify materials below shallow foundations are adequate to achieve the design bearing capacity.	–	X
2. Verify excavations are extended to proper depth and have reached proper material.	–	X
3. Perform classification and testing of compacted fill materials.	–	X
4. Verify use of proper materials, densities and lift thicknesses during placement and compaction of compacted fill.	X	–
5. Prior to placement of compacted fill, inspect subgrade and verify that site has been prepared properly.	–	X

1. Refer to CBC Section 202 for definition of continuous and periodic inspections.

REQUIRED SPECIAL INSPECTIONS AND TESTS OF POST–INSTALLED CONCRETE ANCHORS

TYPE	CONTINUOUS SPECIAL INSPECTION[1]	PERIODIC SPECIAL INSPECTION[1]	PRODUCT NAME AND EVALUATION REPORT REFERENCE
EXPANSION ANCHORS			
1. During anchor installation, verify the following:			Simpson Strong–Bolt 2 ICC ESR–3037 or Hilti Kwik Bolt TZ ICC ESR–1917
a. Anchor type	–	X	
b. Anchor dimensions	–	X	
c. Hole cleanliness/cleaning procedures	–	X	
d. Concrete type/compressive strength/thickness	–	X	
e. Drill bit diameter	–	X	
f. Anchor embedment depth	–	X	
g. Edge/End distance(s)/Anchor spacing(s)	–	X	
h. Tightening Torque	–	X	
i Compliance with the appropriate Evaluation Report and manufacturer's published installation instructions, as well as the approved construction documents.	–	X	
EPOXY ANCHORS			
1. During the initial installation of a series of anchors of the same type and size, installed by the same construction personnel, verify the following[2]:			Simpson SET–XP ICC ESR–2508 or Hilti HIT–HY 200 ICC ESR–3187
a. Adhesive name, expiration date, proper nozzle	–	X	
b. Anchor material, grade, diameter, length and cleanliness	–	X	
c. Hole cleanliness/cleaning procedures	–	X	
d. Concrete type/compressive strength/thickness	–	X	
e. Drill bit diameter	–	X	
f. Anchor embedment depth	–	X	
g. Edge/End distance(s)/Anchor spacing(s)	–	X	
h. Compliance with the appropriate Evaluation Report and manufacturer's published installation instructions, as well as the approved construction documents.	–	X	

1. Refer to CBC Section 202 for definition of continuous and periodic inspections.
2. Any change in anchor product or personnel performing the installation requires an initial reinspection. For ongoing installations over an extended period, the special inspector must make regular inspections to confirm proper handling and installation of the product.

REQUIRED SPECIAL INSPECTIONS AND TESTS OF POST–INSTALLED MASONRY ANCHORS

TYPE	CONTINUOUS SPECIAL INSPECTION[1]	PERIODIC SPECIAL INSPECTION[1]	PRODUCT NAME AND EVALUATION REPORT REFERENCE
EXPANSION ANCHORS			
1. During anchor installation, verify the following:			Simpson Wedge–All ICC ESR–1396 or Hilti Kwik Bolt 3 ICC ESR–1385
a. Anchor type	X	–	
b. Anchor dimensions	X	–	
c. Hole cleanliness/cleaning procedures	X	–	
d. Grout and mortar compressive strengths	X	–	
e. Masonry unit type/compliance with ASTM C90 prism compressive strength (where required)	X	–	
f. Drill bit diameter	X	–	
g. Anchor embedment depth	X	–	
h. Edge/End distance(s)/Anchor spacing(s)	X	–	
i. Tightening Torque	X	–	
j. Compliance with the appropriate Evaluation Report and manufacturer's published installation instructions, as well as the approved construction documents.	X	–	
EPOXY ANCHORS			
1. During anchor installation, verify the following:			Simpson SET–XP IAPMO UES ER–265 or Hilti HIT–HY 70 ICC ESR–2682
a. Adhesive name, expiration date, proper nozzle	–	X	
b. Anchor material, grade, diameter, length and cleanliness	–	X	
c. Hole cleanliness/cleaning procedures	–	X	
d. Grout and mortar compressive strengths	–	X	
e. Masonry unit type/compliance with ASTM C90 prism compressive strength (where required)	–	X	
f. Drill bit diameter	–	X	
g. Anchor embedment depth	–	X	
h. Edge/End distance(s)/Anchor spacing(s)	–	X	
i Compliance with the appropriate Evaluation Report and manufacturer's published installation instructions, as well as the approved construction documents.	–	X	

1. Refer to CBC Section 202 for definition of continuous and periodic inspections.

REGISTERED PROFESSIONAL ENGINEER
JEFFREY A. FINN
C 43928
S 3672
CIVIL & STRUCTURAL
STATE OF CALIFORNIA
12/2/19

City of Santa Rosa
Transportation & Public Works

NO.	DATE	REVISION	BY

DATE: JANUARY, 2020
CHK BY: TEE
SCALE: AS SHOWN
DWN BY: REM

APPROVED: Deputy Director – Engineering
By _____ Date 12/2/20
Lori Urbanek, PE

CITY OF SANTA ROSA
EMERGENCY WELL 7

STATEMENT OF SPECIAL INSPECTIONS

CONTRACT NO. C01965
SHEET 15 OF 42
FILE NO. 2017–0023

Finn Design Group, Inc.
Structural Engineers
3825 Hopyard Road, Suite 125
Pleasanton, CA 94588
OFFICE (925) 737–1600
FAX (925) 737–1601

EMERGENCY WELL 7

M:\1drawings\16–dwgs\16–130.1 A Place to Play Well CD\16–1301S2.dwg 11/18/2019 11:53 AM Ronald Moe

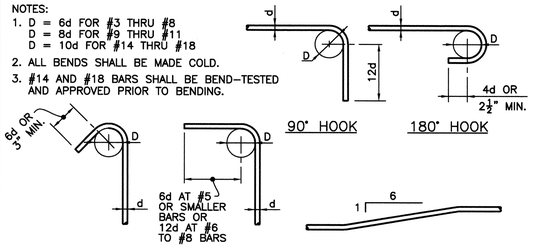

DETAIL 1/16 NTS

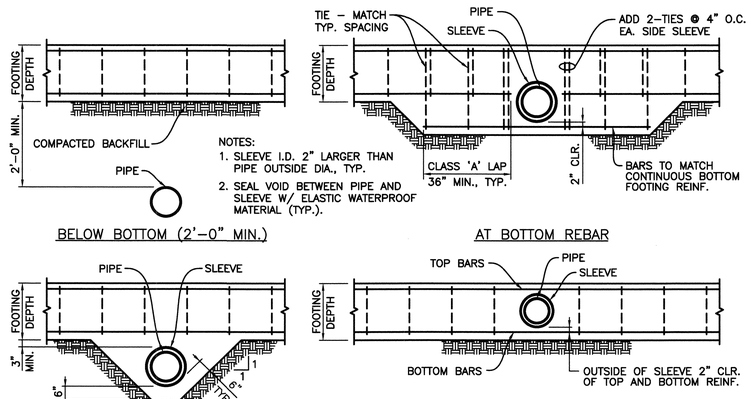

DETAIL 2/16 NTS

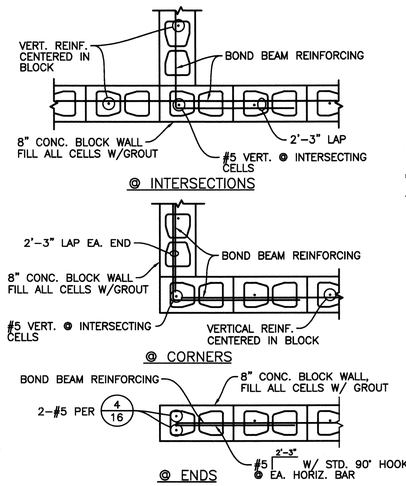

DETAIL 3/16 3/4" = 1'–0"

NOTE: CONTRACTOR SHALL PROVIDE ADEQUATE TEMPORARY FALSE WORK TO SUPPORT MASONRY ABOVE OPENINGS. FALSE WORK SHALL REMAIN IN PLACE UNTIL MASONRY HAS ATTAINED DESIGN STRENGTH.

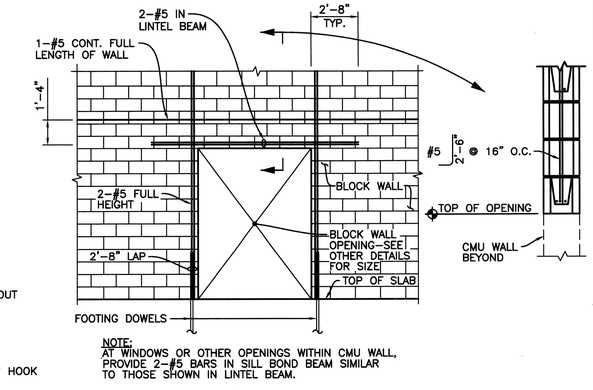

DETAIL 4/16 NTS

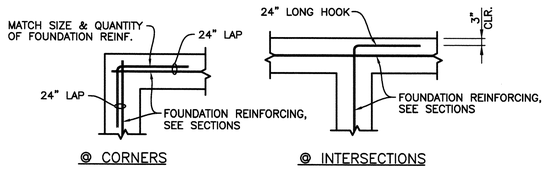

DETAIL 5/16 NTS

CONCRETE REINFORCING LAP SPLICES		
CONCRETE STRENGTH	f'_c = 4000 PSI	
BAR SIZE	TOP BARS	OTHER BARS
#3	1'–4"	1'–4"
#4	1'–8"	1'–4"
#5	2'–1"	1'–7"
#6	2'–5"	1'–11"
#7	3'–7"	2'–9"
#8	4'–1"	3'–1"
#9	4'–7"	3'–6"
#10	5'–2"	3'–11"
#11	5'–8"	4'–5"

NOTES:
1. LAP SPLICE LENGTHS SHALL BE INCREASED BY 50% WHERE BAR CLEAR COVER IS LESS THAN 2 BAR DIAMETERS OR WHERE SPACING BETWEEN BARS BEING SPLICED IS LESS THAN 5 BAR DIAMETERS.
2. TOP BARS ARE HORIZONTAL BARS WITH MORE THAN 12 INCHES OF CONCRETE CAST BELOW THE BARS.

DETAIL 6/16 NTS

MASONRY REINFORCING LAP SPLICES	
MASONRY STRENGTH	f'_m= 1500 PSI
BAR SIZE	LAP SPLICE LENGTH
#3	1'–4"
#4	1'–9"
#5	2'–3"
#6	4'–1"
#7	5'–3"
#8	6'–0"
#9	6'–10"

NOTES:
1. CLEAR COVER TO BARS BEING SPLICED SHALL BE A MINIMUM OF 3 INCHES.

DETAIL 7/16 NTS

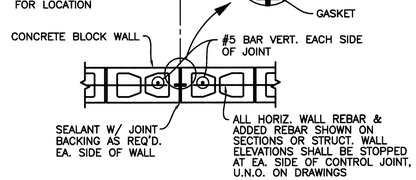

DETAIL 8/16 3/4" = 1'–0"

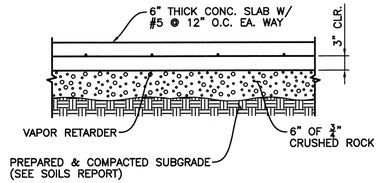

DETAIL 9/16 3/4" = 1'–0"

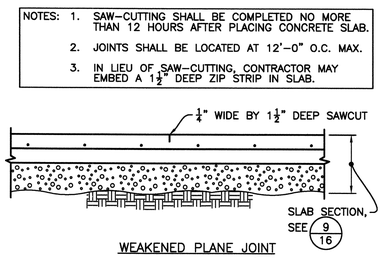

DETAIL 10/16 3/4" = 1'–0"

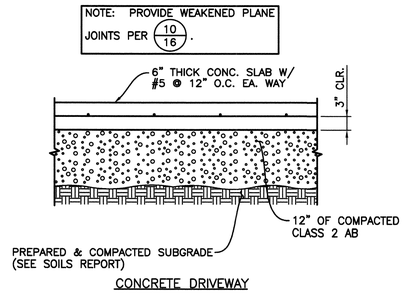

DETAIL 11/16 3/4" = 1'–0"

REGISTERED PROFESSIONAL ENGINEER JEFFREY A. FINN C 43928 S 3672 CIVIL & STRUCTURAL STATE OF CALIFORNIA 12/2/19

City of Santa Rosa Transportation & Public Works

NO.	DATE	REVISION	BY

SCALE: AS SHOWN
DWN BY: REM
DATE: JANUARY, 2020
CHK BY: TEE
APPROVED: Deputy Director – Engineering
By Lori Urbanek, PE Date 1/24/20

CITY OF SANTA ROSA
EMERGENCY WELL 7

TYPICAL DETAILS

Finn Design Group, Inc.
Structural Engineers
3825 Hopyard Road, Suite 125
Pleasanton, CA 94588
OFFICE (925) 737–1600
FAX (925) 737–1601

CONTRACT NO. C01965
SHEET 16 OF 42
FILE NO. 2017–0023

EMERGENCY WELL 7

M:\1drawings\16–dwgs\16–130.1 A Place to Play Well CD\16–1301S3.DWG 11/22/2019 11:08 AM Ronald Moe

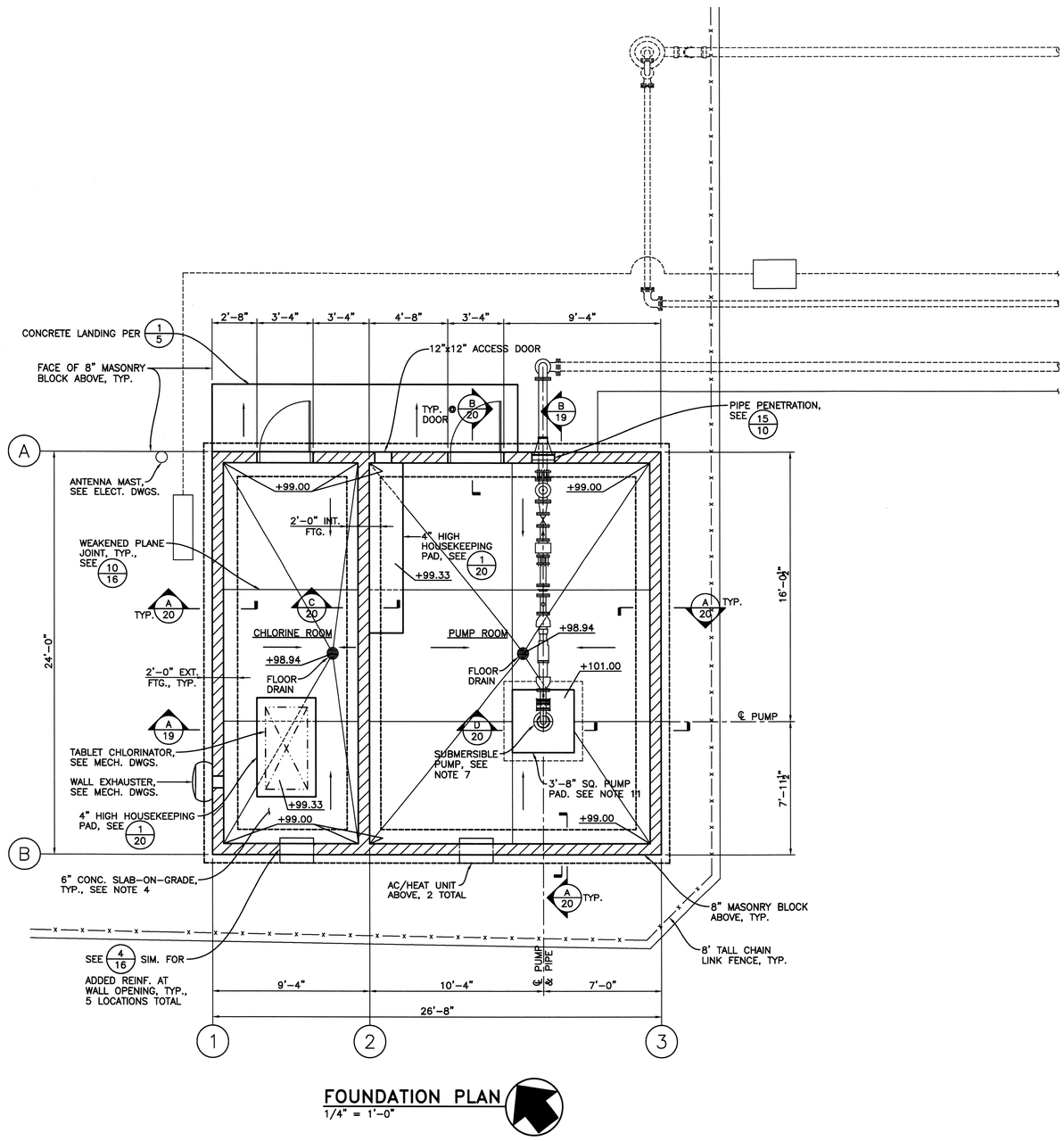

FOUNDATION PLAN

1/4" = 1'-0"

FOUNDATION PLAN NOTES:

1. SEE GENERAL NOTES & SPECIFICATIONS ON SHEET 14. SEE FLOOR PLAN ON SHEET 12 FOR DIMENSIONS & NOTES NOT SHOWN.
2. +99.00 DENOTES TOP OF CONCRETE SLAB OR PAD ELEVATION. WHERE GIVEN, ELEVATION BELOW LINE INDICATES TOP OF CONCRETE SLAB ELEVATION IN TRENCH OR PIT.
3. → DENOTES DIRECTION OF SLAB SLOPE. PROVIDE A MIN. SLOPE OF 0.5% AT SLABS & TRENCHES INDICATED.
4. SLAB SECTION:
   - 6" CONCRETE SLAB W/ #5 @ 12" O.C. EACH WAY
   - VAPOR RETARDER
   - 6" OF ¾" CRUSHED ROCK
   - SOIL SUBGRADE PREPARED PER SOILS REPORT
5. DENOTES MASONRY BLOCK WALL
6. MATERIAL SPECIFICATIONS
   CONCRETE: MIN. 28 DAY STRENGTH = 4,000 psi
   REINFORCING STEEL: ASTM A615, GRADE 60
   CONCRETE MASONRY: ASTM C90
   MORTAR: ASTM C270, TYPE S, f'c = 1,800 psi
   GROUT: ASTM C476, f'c = 2,500 psi
   CMU ASSEMBLY: f'm = 1,500 psi
7. ANCHORAGE OF PUMP SHALL BE BY THE CONTRACTOR. CONTRACTOR SHALL SUBMIT DRAWINGS AND CALCULATIONS FOR THE PUMP ANCHORAGE FOR REVIEW. SEE PROJECT SPECIFICATIONS. MIN. ANCHORAGE SHALL BE A 1"ø ANCHOR BOLT AT EACH CORNER OF BASE ℄, 4 MIN. TOTAL.
8. CMU CONTROL JOINTS NOT SHOWN FOR CLARITY. SEE ROOF FRAMING PLAN ON SHEET 18 FOR REQUIRED LOCATIONS.
9. SEE SHEET 13 FOR ARCHITECTURAL FINISH SCHEDULE SHOWING INTERIOR FINISH REQUIREMENTS.
10. SEE SHEET 16 FOR TYPICAL CONCRETE AND MASONRY DETAILS.
11. PUMP PAD DIMENSIONS SHALL BE VERIFIED WITH PUMP MANUFACTURER PRIOR TO BEGINNING CONSTRUCTION.

REGISTERED PROFESSIONAL ENGINEER
JEFFREY A. FINN
C 43928
S 3672
CIVIL & STRUCTURAL
STATE OF CALIFORNIA
12/2/19

City of Santa Rosa
Transportation & Public Works

NO.	DATE	REVISION	BY

DATE: JANUARY, 2020
CHK BY: TEE
SCALE: AS SHOWN
DWN BY: REM
APPROVED: Deputy Director – Engineering
By Lori Urbanek, PE Date 12/2/20

CITY OF SANTA ROSA
EMERGENCY WELL 7

FOUNDATION PLAN

CONTRACT NO. C01965
SHEET 17 OF 42
FILE NO. 2017-0023

FDG Finn Design Group, Inc.
Structural Engineers
3825 Hopyard Road, Suite 125
Pleasanton, CA 94588
OFFICE (925) 737-1600
FAX (925) 737-1601

M:\1drawings\16-dwgs\16-130.1 A Place to Play Well CD\16-1301S4.dwg 11/18/2019 12:02 PM Ronald Moe

EMERGENCY WELL 7

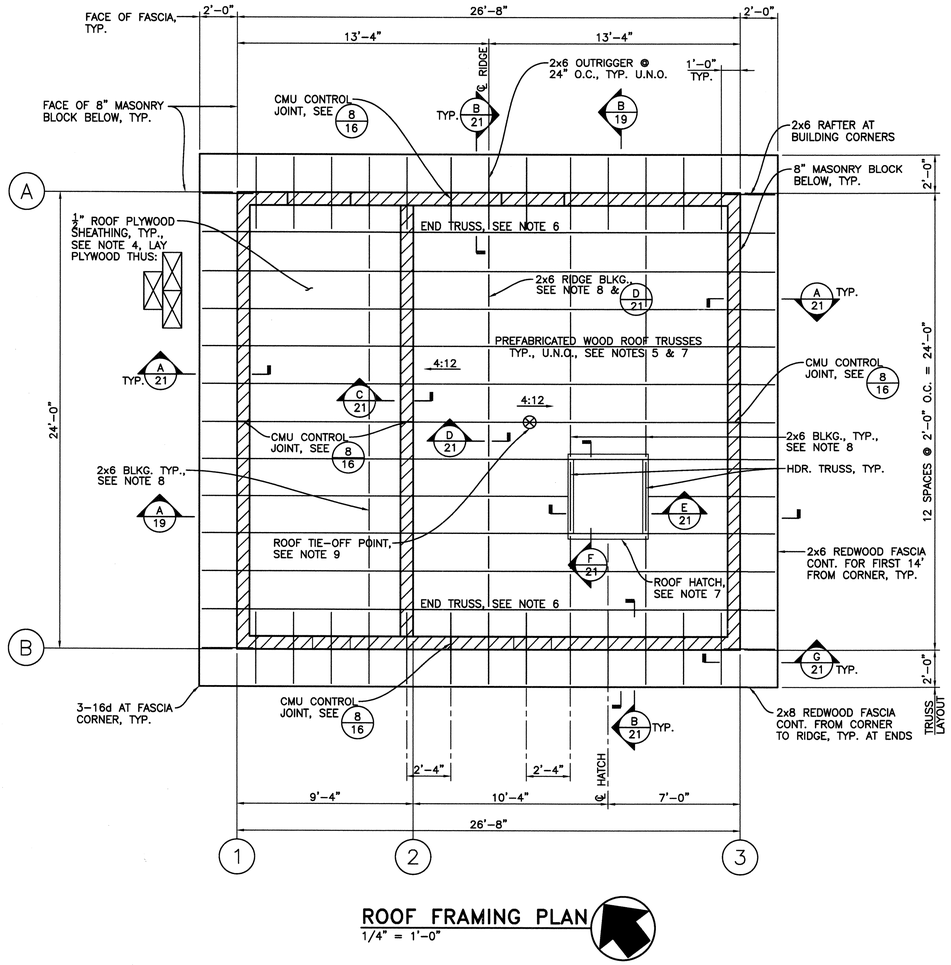

ROOF FRAMING PLAN

1/4" = 1'-0"

ROOF FRAMING PLAN NOTES:

1. SEE GENERAL NOTES & SPECIFICATIONS ON SHEET 14.
2. <4:12 DENOTES DIRECTION AND SLOPE OF ROOF.
3. DENOTES MASONRY BLOCK WALL.
4. ROOF PLYWOOD SHEATHING SHALL BE 1/2" CDX PLYWOOD. SEE PROJECT SPECIFICATIONS. PLYWOOD SHALL BE INSTALLED WITH FACE GRAIN PERPENDICULAR TO SUPPORTS. ATTACH PLYWOOD TO SUPPORTING FRAMING W/ 10d COMMON AT ALL EDGES AT 6" O.C. AND 10d COMMON AT 12" O.C. IN THE FIELD. ALL UNSUPPORTED PLYWOOD EDGES SHALL BE BLOCKED W/ 2x4 BLOCKING AND EDGE-NAILED.
5. ALL TRUSSES SHALL BE CAPABLE OF CARRYING A MINIMUM LATERAL SEISMIC LOAD OF 1,400 LBS. (SERVICE LOAD LEVEL) EVENLY DISTRIBUTED TO THE TRUSS TOP CHORD.
6. END TRUSS LOADING FROM OUTRIGGERS AND FASCIAS SHALL BE AS FOLLOWS:

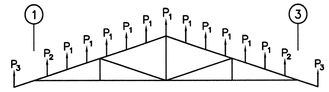

LOAD	DEAD	LIVE
P_1	33 LBS.	43 LBS.
P_2	38 LBS.	50 LBS.
P_3	23 LBS.	30 LBS.

END TRUSS

7. CONTRACTOR SHALL COORDINATE ROOF TRUSS LAYOUT W/ ROOF TRUSS FABRICATOR AND ROOF HATCH MANUFACTURER PRIOR TO SUBMITTING ROOF TRUSS SUBMITTAL TO THE ENGINEER FOR REVIEW.
8. PROVIDE 2x6 BLOCKING BETWEEN TRUSSES WHERE SHOWN. CONNECT ENDS TO TRUSSES AS SHOWN IN D 21. INSTALL CONT. 'CS14' STRAP OVER FULL-LENGTH OF OUTRIGGERS, BLOCKING & HEADER TRUSSES. AT RIDGE, INSTALL CONT. 'CS14' STRAP OVER FULL-LENGTH OF RIDGE INCLUDING OUTRIGGERS.
9. ROOF TIE-OFF POINT SHALL BE PER PROJECT SPECIFICATIONS. ROOF TRUSS SHALL BE CAPABLE OF CARRYING A MINIMUM LIVE LOAD OF 5,000 LBS. APPLIED EITHER HORIZONTALLY OR VERTICALLY AT 6" ABOVE THE TOP OF THE TOP CHORD.

REGISTERED PROFESSIONAL ENGINEER JEFFREY A. FINN C 43928 S 3672 CIVIL & STRUCTURAL STATE OF CALIFORNIA 12/2/19

City of Santa Rosa Transportation & Public Works

NO.	DATE	REVISION	BY

DATE: JANUARY, 2020
CHK BY: TEE
SCALE: AS SHOWN
DWN BY: REM

APPROVED: *Deputy Director - Engineering*
By _____ Date 12/2/20
Lori Urbanek, PE

CITY OF SANTA ROSA
EMERGENCY WELL 7

ROOF FRAMING PLAN

CONTRACT NO. C01965
SHEET 18 OF 42
FILE NO. 2017-0023

Finn Design Group, Inc.
Structural Engineers
3825 Hopyard Road, Suite 125
Pleasanton, CA 94588
OFFICE (925) 737-1600
FAX (925) 737-1601

M:\1drawings\16-dwgs\16-130.1 A Place to Play Well CD\16-1301S5.dwg 11/18/2019 12:03 PM Ronald Moe

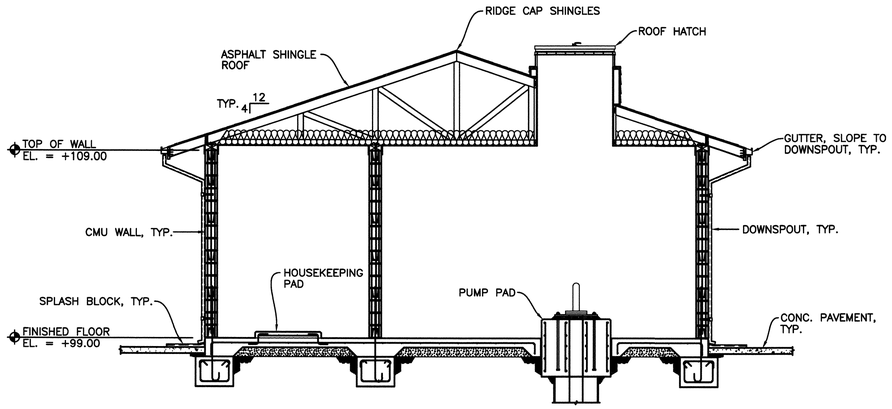

SECTION A / 19
1/4" = 1'-0"

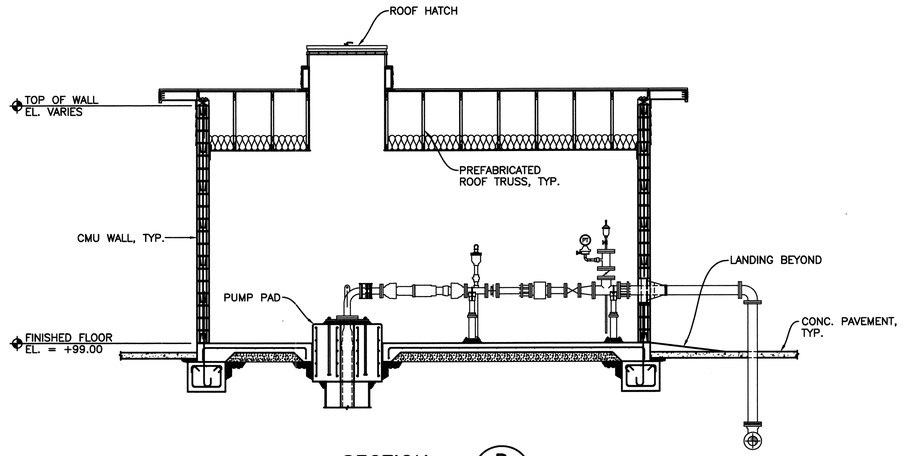

SECTION B / 19
1/4" = 1'-0"

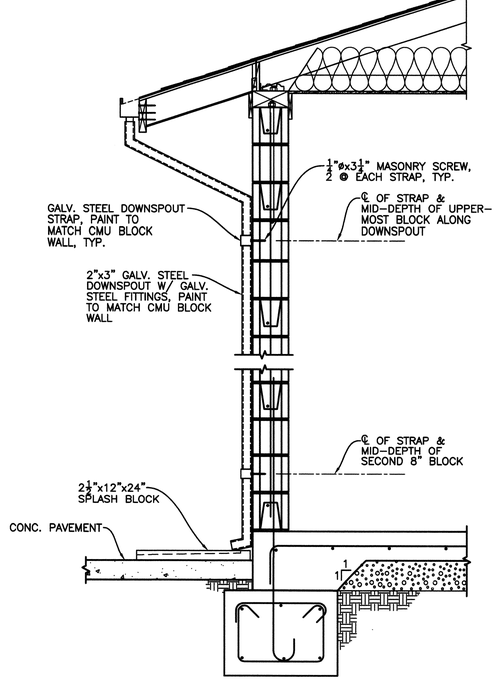

SECTION C / 19
3/4" = 1'-0"

REGISTERED PROFESSIONAL ENGINEER
JEFFREY A. FINN
C 43928
S 3672
CIVIL & STRUCTURAL
STATE OF CALIFORNIA
12/2/19

City of Santa Rosa
Transportation & Public Works

NO.	DATE	REVISION	BY

SCALE: AS SHOWN
DWN BY: REM
DATE: JANUARY, 2020
CHK BY: TEE

APPROVED: *Deputy Director - Engineering*
By _____ Date: 1/31/20
Lori Urbanek, PE

CITY OF SANTA ROSA
EMERGENCY WELL 7

BUILDING SECTIONS

CONTRACT NO. C01965
SHEET 19 OF 42
FILE NO. 2017-0023

Finn Design Group, Inc.
Structural Engineers
3825 Hopyard Road, Suite 125
Pleasanton, CA 94588
OFFICE (925) 737-1600
FAX (925) 737-1601

EMERGENCY WELL 7

M:\1drawings\16-dwgs\16-130.1 A Place to Play Well CD\16-1301S6.dwg 11/22/2019 11:10 AM Ronald Moe

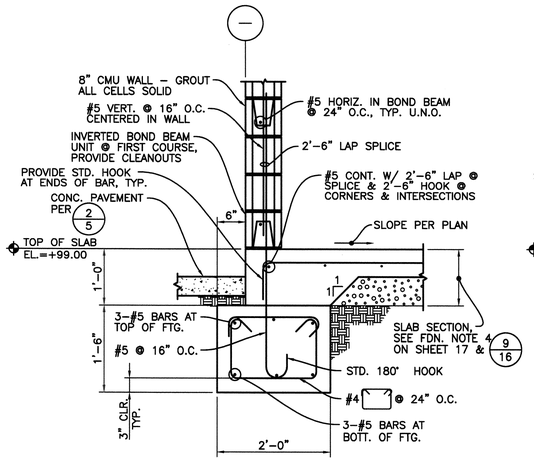

SECTION A 20
3/4" = 1'-0"

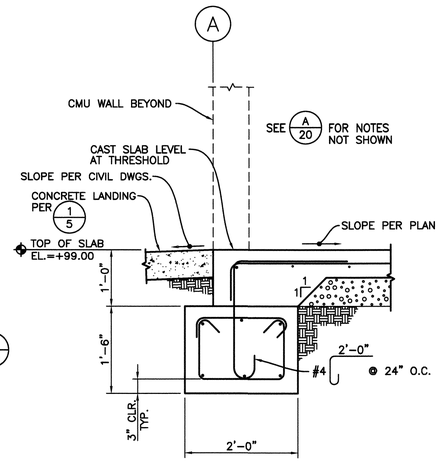

SECTION B 20
3/4" = 1'-0"

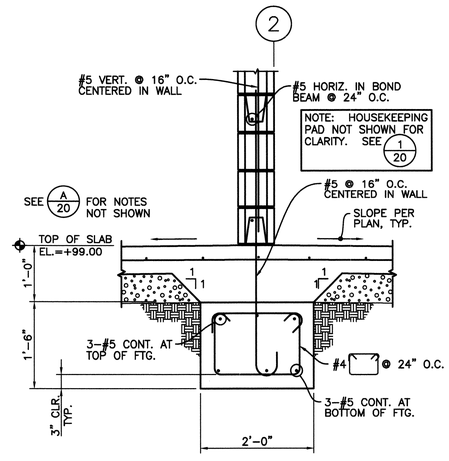

SECTION C 20
3/4" = 1'-0"

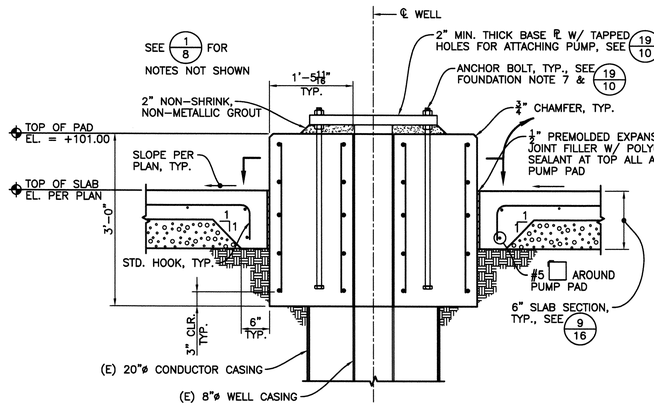

SECTION D 20
3/4" = 1'-0"

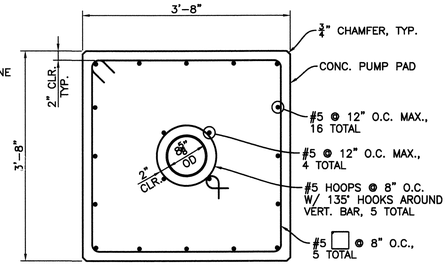

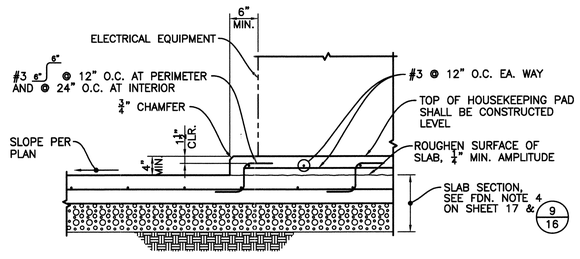

DETAIL 1 20
3/4" = 1'-0"

REGISTERED PROFESSIONAL ENGINEER
JEFFREY A. FINN
C 43928
S 3672
CIVIL & STRUCTURAL
STATE OF CALIFORNIA
12/2/19

City of Santa Rosa
Transportation & Public Works

NO.	DATE	REVISION	BY

SCALE: AS SHOWN
DWN BY: REM
DATE: JANUARY, 2020
CHK BY: TEE

APPROVED: *Deputy Director – Engineering*
By _____ Date 1/31/20
Lori Urbanek, PE

CITY OF SANTA ROSA
EMERGENCY WELL 7

FOUNDATION SECTIONS & DETAILS

CONTRACT NO. C01965
SHEET 20 OF 42
FILE NO. 2017-0023

Finn Design Group, Inc.
Structural Engineers
3825 Hopyard Road, Suite 125
Pleasanton, CA 94588
OFFICE (925) 737-1600
FAX (925) 737-1601

M:\1drawings\16-dwgs\16-130.1 A Place to Play Well CD\16-1301S7.dwg 11/18/2019 1:12 PM Ronald Moe

EMERGENCY WELL 7

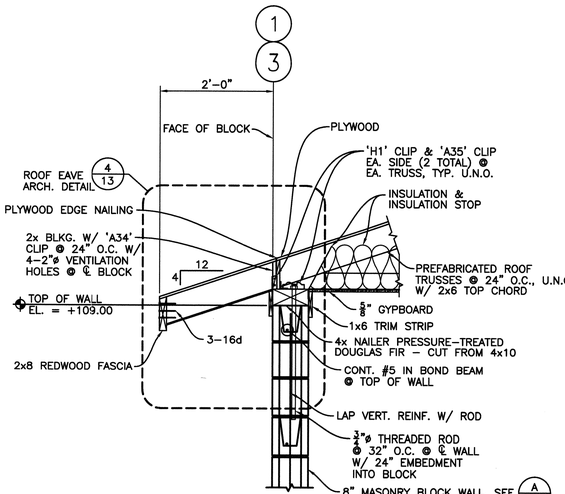

SECTION A 21
3/4" = 1'-0"

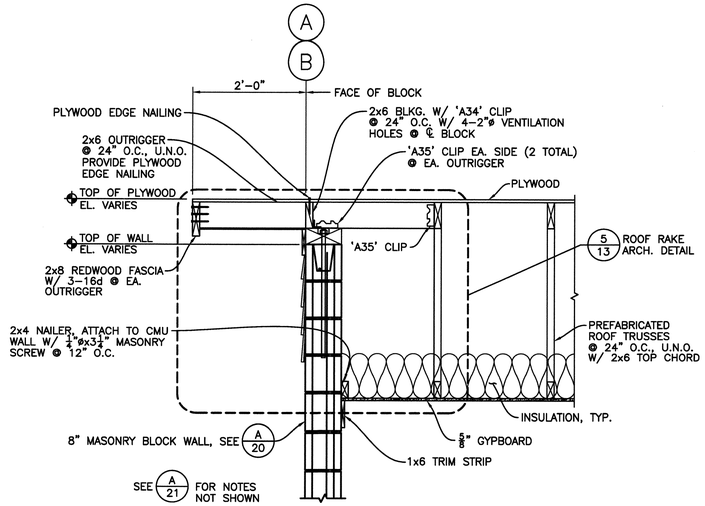

SECTION B 21
3/4" = 1'-0"

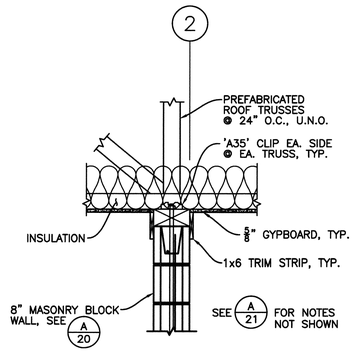

SECTION C 21
3/4" = 1'-0"

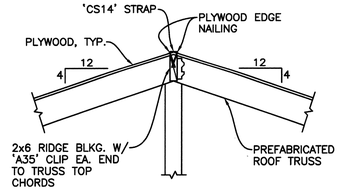

SECTION D 21
3/4" = 1'-0"

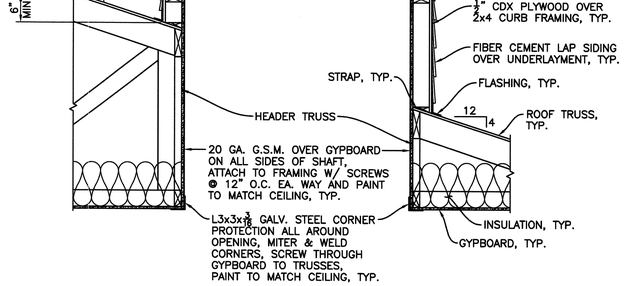

SECTION E 21
3/4" = 1'-0"

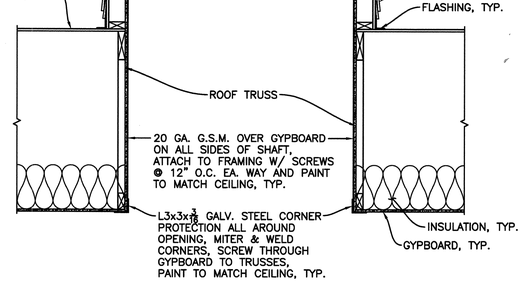

SECTION F 21
3/4" = 1'-0"

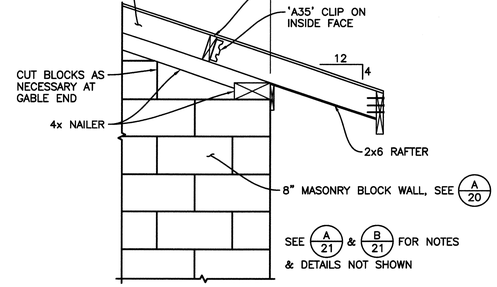

SECTION G 21
3/4" = 1'-0"

REGISTERED PROFESSIONAL ENGINEER
JEFFREY A. FINN
C 43928
S 3672
CIVIL & STRUCTURAL
STATE OF CALIFORNIA
12/2/19

City of Santa Rosa
Transportation & Public Works

NO.	DATE	REVISION	BY

DATE: JANUARY, 2020
CHK BY: TEE
SCALE: AS SHOWN
DWN BY: REM

APPROVED: *Deputy Director - Engineering*
By _____ Date 1/27/20
Lori Urbanek, PE

CITY OF SANTA ROSA
EMERGENCY WELL 7

ROOF FRAMING SECTIONS & DETAILS

CONTRACT NO. C01965
SHEET 21 OF 42
FILE NO. 2017-0023

FDG Finn Design Group, Inc.
Structural Engineers
3825 Hopyard Road, Suite 125
Pleasanton, CA 94588
OFFICE (925) 737-1600
FAX (925) 737-1601

EMERGENCY WELL 7

M:\1drawings\16-dwgs\16-130.1 A Place to Play Well CD\16-1301S8.dwg 11/22/2019 11:27 AM Ronald Moe

MISCELLANEOUS ELECTRICAL & INSTRUMENTATION ABBREVIATIONS

&	AND	HZ	HERTZ (CYCLES PER SECOND)	PTT	PUSH TO TEST
@	AT	HZD	HAVARDOUS AREA, EXPLOSION PROOF	PV	PROCESS VARIABLE
A	AMBER, AMPERES	I	INTERLOCK	PVC	POLY VINYL CHLORIDE
AC	ALTERNATING CURRENT	I/O	INPUT/OUTPUT	PWM	PULSE WIDTH MODULATION
AFF	ABOVE FINISHED FLOOR	ICR	INSTRUMENTATION CONTROL RELAY	PWR	POWER
AI	ANALOG INPUT	INCAN	INCANDESCENT	R	RED
AIC	AMP INTERRUPTING CAPACITY SYMMETRICAL	INST	INSTANTANEOUS	RCT	REPEAT CYCLE TIMER
ALT	ALTERNATOR	ISC	SHORT CKT INTERRUPTING CURRENT (SYMM)	REF	REFERENCE
AM	AMMETER	ISR	INTRINSICALLY SAFE RELAY	RIO	REMOTE I/O
ATS	AUTOMATIC TRANSFER SWITCH	J	JUNCTION BOX	RTD	RESISTANCE TEMPERATURE DETECTOR
AO	ANALOG OUTPUT	K	KILO, PREFIX	RTM	RUN TIME METER
AWG	AMERICAN WIRE GUAGE	L	LINE	RTU	REMOTE TELEMETRY UNIT
B	BLUE	LA	LIGHTNING ARRESTOR	RVNR	REDUCED VOLTAGE NON-REVERSING
BC	BARE COPPER	LC	LIGHTING CONTACTOR	(R)	REWIRE, RELOCATE, REVISE, REUSE, REPLACE
BFC	BELOW FINISHED CEILING	LCD	LIQUID CRYSTAL DISPLAY	SCH	SCHEDULE
BOD	BIOCHEMICAL OXYGEN DEMAND	LED	LIGHT EMITTING DIODE	SEC	SECONDARY
BLK	BLANK	LEL	LOWER EXPLOSIVE LIMIT	SECS	SECONDS
C	CONDUIT	LO	LOW	SEL	SELECTOR
CAP	CAPACITOR	LOR	LOCAL-OFF-REMOTE	SFA	SERVICE FACTOR AMPS
CB	CIRCUIT BREAKER	LOS	LOCK-OUT STOP SWITCH	SP	SETPOINT
CBL	CABLE	LP	LIGHTING PANELBOARD	SPD	SURGE PROTECTIVE DEVICE
CH	CHANNEL	LPU	LINE PROTECTION UNIT	SPEC	SPECIFICATION
CKT	CIRCUIT	LR	LATCHING RELAY	SS	STAINLESS STEEL
COAX	COAXIAL CABLE	LS	LEVEL SWITCH	SSS	SOLID STATE SOFT STARTER
COMM	COMMUNICATION PORT	M	MOTOR CONTRACTOR	STT	START
CP	CONTROL PANEL	MAX	MAXIMUM	STP	STOP
CPT	CONTROL POWER TRANSFORMER	MCC	MOTOR CONTROL CENTER	SV	SOLENOID VALVE
CR	CONTROL RELAY	MCM	THOUSAND CIRCULAR MILS	SW	SWITCH
CT	CURRENT TRANSFORMER	MCP	MOTOR CIRCUIT PROTECTOR	SWBD	SWITCHBOARD
CTQ	CONSTANT TORQUE	MH	MANHOLE	SWGR	SWITCHGEAR
CU	COPPER	MHD	METAL HALIDE	SYMM	SYMMETRICAL
DC	DIRECT CURRENT	MIN	MINIMUM	T	TRIP
DET	DETAIL	MINS	MINUTES	TB	TERMINAL BLOCK
DI	DIGITAL INPUT	MNFR	MANUFACTURER	TC	TIME CLOCK
DIA	DIAGRAM	MODEM	MODULATOR/DEMODULATOR	TDOD	TIME DELAY ON DE-ENERGIZATION
DISC	DISCONNECT	MOV	MOTOR OPERATED VALVE	TDOE	TIME DELAY ON ENERGIZATION
DIV	DIVISION	MPS	MOTOR PROTECTION SYSTEM	TEL	TELEMETRY
DO	DIGITAL OUTPUT	MS	MOISTURE SENSOR/SWITCH	TELCO	TELEPHONE COMPANY
DPDT	DOUBLE POLE DOUBLE THROW	MTR	MOTOR	TEMP	TEMPERATURE
DWG	DRAWING	MTS	MANUAL TRANSFER SWITCH	TM	THERMAL MAGNETIC
ELEV	ELEVATION	MUX	MULTIPLEXER	TOC	TOTAL ORGANIC CARBON
EMT	ELECTRICAL METALLIC TUBING	MV	MEDIUM VOLTAGE	TR	TIME DELAY RELAY
ETM	ELAPSED TIME METER	N	NEUTRAL	TRIAD	TWISTED & SHIELDED 3 CONDUCTOR
(E)	EXISTING	NC	NORMALLY CLOSED	TS	TEMPERATURE SWITCH
F	FRAME	NEC	NATIONAL ELECTRICAL CODE	TSPR	TWISTED & SHIELDED PAIR
FC	FAIL CLOSED	NEMA	NATIONAL ELECTRICAL MANUFACTURERS ASSOCIATION	TYP	TYPICAL
FCS	FIELD CONTROL STATION	NIC	NOT IN CONTRACT	UG	UNDERGROUND
FLA	FULL LOAD AMPS	NO	NORMALLY OPEN	UL	UNDERWRITERS LABORATORIES
FLP	FAIL LAST POSITION	NP	NAMEPLATE	UON	UNLESS OTHERWISE NOTED
FO	FAIL OPEN	NTS	NOT TO SCALE	UPS	UNINTERRUPTIBLE POWER SUPPLIES
FLEX	FLEXIBLE, METAL LIQUID TIGHT CONDUIT	(N)	NEW	V	VOLTAGE
FS	FLOW SWITCH OR FULL SPEED	OC	ON CENTER	VA	VOLT AMPS
FV, FVNR	FULL VOLTAGE NON-REVERSING	OI	OPERATOR INTERFACE	VAR	VOLT AMP REACTIVE
FVR	FULL VOLTAGE REVERSING	OL	OVERLOAD	VFD	VARIABLE FREQUENCY DRIVE
FWD	FORWARD	ORP	OXIDATION REDUCTION POTENTIAL	VLV	VALVE
(F)	FUTURE	P	PHASE, POLE	VM	VOLTMETER
G	GREEN	PB	PULL BOX	VTQ	VARIABLE TORQUE
GALV	GALVANIZED	PC	PERSONAL COMPUTER	W	WHITE, WATTS
GEN	GENERATOR	PE	PHOTOCELL	WHM	WATT-HOUR METER
GFI	GROUND FAULT CIRCUIT INTERRUPTER	PF	POWER FAIL	WM	WATTMETER
GND	GROUND	PFR	POWER (PHASE) FAIL RELAY	WP	WATERPROOF, WEATHER PROOF
GRS	GALVANIZED RIGID STEEL CONDUIT	PH	HYDROGEN ION CONCENTRATION	WS	TORQUE SWITCH
GRS-PVC	PVC COATED GRS CONDUIT	PLC	PROGRAMMABLE LOGIC CONTROLLER	XFMR	TRANSFORMER
HC	PUSHBUTTON	PM	POWER MONITOR	XS	MISCELLANEOUS SWITCH
HI	HIGH	PMP	PUMP	Y	YELLOW
HID	HIGH INTENSITY DISCHARGE	PNL	PANEL	Z	IMPEDANCE
HIM	HUMAN INTERFACE MODULE	PR	PAIR, TWISTED & SHIELDED CABLE	ZS	LIMIT SWITCH
HOA	HAND-OFF-AUTO	PRESS	PRESSURE		
HOR	HAND-OFF-REMOTE	PRI	PRIMARY		
HP	HORSEPOWER	PROVIDE	FURNISH, INSTALL & CONNECT		
HPS	HIGH PRESSURE SODIUM	PRR	POWER RELAY		
HS	HAND SWITCH	PS	PRESSURE SWITCH, POWER SUPPLY		
HTR	HEATER	PT	POTENTIAL TRANSFORMER		

SWITCHES – PROCESS

SYMBOL	DESCRIPTION
FS	FLOW SWITCH – CLOSES UPON INCREASING FLOW
FS	FLOW SWITCH – OPENS UPON INCREASING FLOW
LS	LEVEL SWITCH – CLOSES UPON INCREASING LEVEL
LS	LEVEL SWITCH – OPENS UPON INCREASING LEVEL
PS	PRESSURE SWITCH – CLOSES UPON INCREASING PRESSURE (INCREASING VACUUM)
PS	PRESSURE SWITCH – OPENS UPON INCREASING PRESSURE (INCREASING VACUUM)
TS	TEMPERATURE SWITCH – CLOSES UPON INCREASING TEMPERATURE
TS	TEMPERATURE SWITCH – OPENS UPON INCREASING TEMPERATURE
ZS	LIMIT SWITCH – CLOSES AT SET LIMIT
ZS	LIMIT SWITCH – OPENS AT SET LIMIT
ZS	PROXIMITY SWITCH – CLOSES UPON DECREASING DISTANCE
ZS	PROXIMITY SWITCH – OPENS UPON DECREASING DISTANCE
WS	TORQUE SWITCH – CLOSES UPON INCREASING TORQUE
WS	TORQUE SWITCH – OPENS UPON INCREASING TORQUE

SWITCHES – OPERATOR

SYMBOL	DESCRIPTION
SW	TOGGLE OR DISCONNECT SWITCH
PB	PUSHBUTTON – NORMALLY OPEN, MOMENTARY ACTION
PB	PUSHBUTTON – NORMALLY CLOSED, MOMENTARY ACTION
PB	PUSHBUTTON, MECHANICALLY INTERLOCKED, DOUBLE CIRCUIT – NORMALLY CLOSED AND NORMALLY OPEN, MAINTAINED ACTION
H O A	SELECTOR SWITCH, 3 POSITION – CONTACT STATUS SHOWN EXISTS AT POSITION OF H-HAND, O-OFF, OR A-AUTO
2–1 1–2	SELECTOR SWITCH, 2 POSITION – CONTACT STATUS SHOWN EXISTS AT POSITION AS SHOWN

DEVICES – RELAY

SYMBOL	DESCRIPTION
CR 1, 28, 111	CONTROL RELAY CR1 WITH NORMALLY OPEN CONTACT ON LINE 28 & NORMALLY CLOSED CONTACT ON LINE 111
TR 1	TIME DELAY RELAY TR2 – ADJUSTABLE TIME DELAY RANGE & SETTING AS SHOWN
TDOE TDOD	TIME DELAY ON ENERGIZATION TIME DELAY ON DE-ENERGIZATION
M1	CONTACTOR OR STARTER M1
SV	SOLENOID
CR1 (105)	NORMALLY OPEN, RELAY CONTACT – ACTUATED BY RELAY CR1 COIL LOCATED ON LINE 105
CR1	NORMALLY CLOSED, RELAY CONTACT – ACTUATED BY RELAY CR1
TR2	NORMALLY OPEN, TIME DELAY RELAY CONTACT – CONTACT CLOSES AFTER TR2 IS ENERGIZED
TR2	NORMALLY CLOSED, TIME DELAY RELAY CONTACT – CONTACT OPENS AFTER TR2 IS ENERGIZED
TR2	NORMALLY OPEN, TIME DELAY RELAY CONTACT – CONTACT OPENS AFTER TR2 IS DE-ENERGIZED
TR2	NORMALLY CLOSED, TIME DELAY RELAY CONTACT – CONTACT CLOSES AFTER TR2 IS DE-ENERGIZED
TR2	CONTACT OPENS AND CLOSES IN A TIMED REPEAT CYCLE

DEVICES – FRONT PANEL

SYMBOL	DESCRIPTION
X	INDICATING LIGHT, LETTER "X" INDICATES COLOR: R=RED G=GREEN, A=AMBER, W=WHITE Y=YELLOW, B=BLUE
PTT X	INDICATING LIGHT, PUSH TO TEST
AM	AMP METER
VM	VOLT METER
ETM	ELAPSED TIME METER
RTM	RUN TIME METER
XS	MULTI-POSITION SWITCH WHERE LETTER "X" IS FUNCTION: A=AMP, V=VOLT

COMPONENTS

SYMBOL	DESCRIPTION
RES	RESISTOR
	POTENTIOMETER
	CAPACITOR, FIXED
	CAPACITOR, ADJUSTABLE
	DIODE
	DIODE, ZENER
	VARISTOR TRANSIENT VOLTAGE SUPPRESSOR
	VOLTAGE SURGE SUPPRESSOR, AC
	RESISTANCE TEMPERATURE DETECTOR (RTD)
	THERMOCOUPLE (T/C)

DEVICES – MISCELLANEOUS

SYMBOL	DESCRIPTION
	AUDIBLE ALARM
	BATTERY
HTR	HEATER
	3 PHASE HEATER
G	GENERATOR
# HP	3 PHASE MOTOR # = MOTOR HP
# HP	SINGLE PHASE MOTOR
	TRANSFORMER
	LINE REACTOR

DEVICES – PROTECTIVE

SYMBOL	DESCRIPTION
	DISCONNECT, 3 POLE
	CIRCUIT BREAKER, 3 POLE THERMAL MAGNETIC (TM) OR MOTOR CIRCUIT PROTECT (MCP)
OL	THERMAL OVERLOAD CONTACT
	THERMAL OVERLOAD ELEMENT
	FUSE WITH BLOWN FUSE INDICATING LIGHT
	FUSE
52	MEDIUM VOLTAGE DRAWOUT CIRCUIT BREAKER
	LOW VOLTAGE DRAWOUT CIRCUIT BREAKER

WIRING – CONNECTIONS

SYMBOL	DESCRIPTION
	PANEL OR EQUIPMENT WIRING
	FIELD WIRING
	CONDUCTORS – NOT CONNECTED
	CONDUCTORS – CONNECTED
	GROUND
	CHASSIS OR FRAME GROUND
	PLUG AND RECEPTACLE
	INCOMING LINE
	TERMINAL BLOCKS
	TERMINALS
SHIELD, CONDUCTOR	SHIELDED CABLE

PLAN – SYMBOLS

SYMBOL	DESCRIPTION
	CONDUIT, EXPOSED
	CONDUIT, IN SLAB OR BELOW GRADE
	CONDUIT STUBBED OUT & CAPPED
	CONDUIT BENDS TOWARD OBSERVER
	CONDUIT BENDS AWAY FROM OBSERVER
	CONDUIT ENDS
	CONDUIT CHANGE IN ELEVATION
G	BARE COPPER GROUND WIRE
	GROUND CONNECTION BOLTED TYPE
	GROUND CONNECTION EXOTHERMIC WELD TYPE
	PULL BOX
	DISCONNECT SWITCH
	FIELD CONTROL STATION WITH JUNCTION BOX
#A	FIELD CONTROL STATION WITH #AMP DISCONNECT SWITCH
	SPECIAL RECEPTACLE
J	JUNCTION BOX
T	THERMOSTAT
# A a	LIGHTING, FANS, HEATERS # – CIRCUIT BREAKER NUMBER A – FIXTURE SCHEDULE REF. a – CONTROL SWITCH REFERENCE
#	DUPLEX RECEPTACLE # – CIRCUIT BREAKER NUMBER
# $ 2 a	TOGGLE SWITCH # – CIRCUIT BREAKER NUMBER SUBSCRIPT – CIRCUIT CONTROLLED SUPERSCRIPT – BLANK = 1 POLE 2 = 2 POLE 3 = 3 WAY
#	CONDUIT #
##	EQUIPMENT NUMBER

T.E.E.m.
(916) 457-8144

© MARCH 2017
ATEEM ENGINEERING
ALL RIGHTS RESERVED

Z:\ACADDWG\2016\1606d\1606de001.dwg 12/20/2019 1:15 PM ATEEM

11/22/2019

REGISTERED PROFESSIONAL ENGINEER
AARON M. KIMYUK
NO. 15698
Exp.6-30-2020
ELECTRICAL
STATE OF CALIFORNIA

City of Santa Rosa
Transportation & Public Works

NO.	DATE	REVISION	BY

DATE: NOVEMBER 2019
SCALE: AS SHOWN
CHK BY: SMK
DWN BY: ZKV

APPROVED: Deputy Director – Engineering
By [signature] Lori Urbanek, PE Date 1/24/20

CITY OF SANTA ROSA
EMERGENCY WELL 7

ELECTRICAL SYMBOLS & ABBREVIATIONS, E1

CONTRACT NO. C01965

FILE NO. 2017–0023

EMERGENCY WELL 7

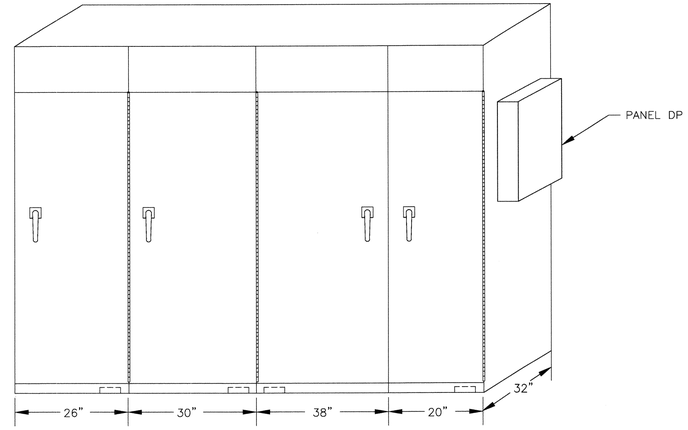

(E) MS WEATHERWRAP
NOT TO SCALE

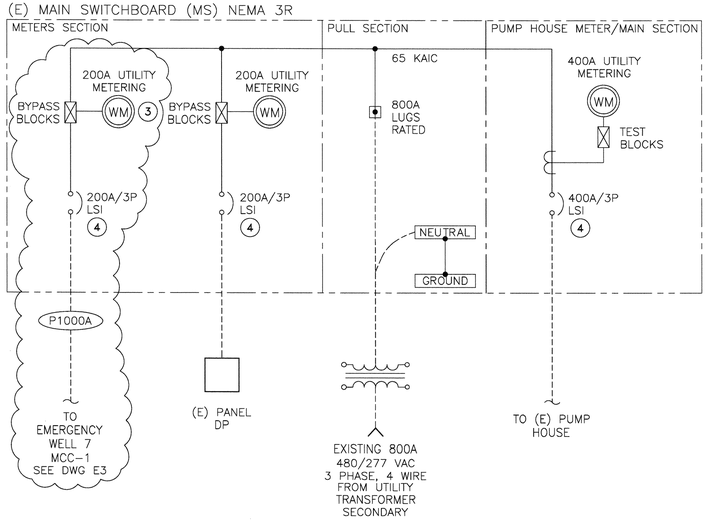

EXISTING MAIN SWITCHBOARD (MS) ONE LINE DIAGRAM ① ②

NOTES:
① ALL LUGS SHALL BE COPPER. SIZE FOR WIRES LISTED IN "CONDUIT & WIRE SCHEDULE".
② NEW WORK SHOWN IN BUBBLES.
③ CONTRACTOR SHALL FIELD VERIFY & MODIFY EXISTING 800A MAIN SWITCHBOARD AS REQUIRED TO INSTALL NEW 200A METER & BREAKER PER PG&E'S REQUIREMENTS.
④ BREAKER TO HAVE LONG, SHORT DELAY AND INSTANTANEOUS (LSI) ADJUSTABLE TRIP UNITS.

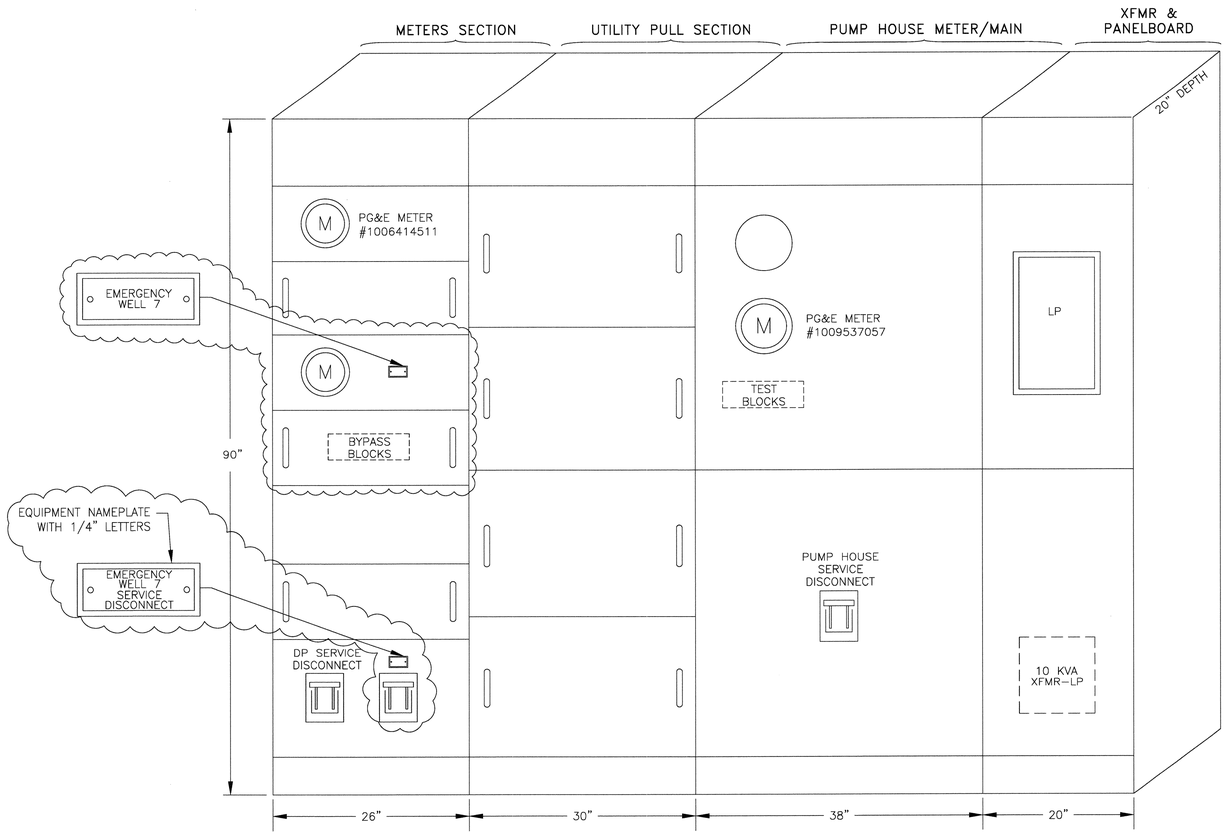

EXISTING MS ELEVATION ① ②
NOT TO SCALE

NOTES:
① NEW WORK SHOWN IN BUBBLES.
② EXISTING MAIN SWITCHBOARD MANUFACTURED BY SIEMENS.

T.E.E.M.
(916) 457-8144

© MARCH 2017
ATEEM ENGINEERING
ALL RIGHTS RESERVED

Z:\ACADDWG\2016\1606d\1606de002.dwg 11/25/2019 2:38 PM ATEEM

REGISTERED PROFESSIONAL ENGINEER
JASON M. KIMMEL
NO. 15698
Exp.6-30-2020
ELECTRICAL
STATE OF CALIFORNIA

11/22/2019

City of Santa Rosa
Transportation & Public Works

NO.	DATE	REVISION	BY

SCALE: AS SHOWN
DWN BY: ZKV
DATE: NOVEMBER 2019
CHK BY: SMK

APPROVED: Deputy Director – Engineering
By Lori Urbanek, PE Date 1/24/20

CITY OF SANTA ROSA
EMERGENCY WELL 7

EXISTING MAIN SWITCHBOARD (MS) ONE LINE DIAGRAM & ELEVATION, E2

CONTRACT NO. C01965
SHEET 23 OF 42
FILE NO. 2017-0023

EMERGENCY WELL 7

MCC-1 LOAD CALCULATIONS	UTILITY SERVICE					
HP DESCRIPTION	LOAD AMPS	QTY LOAD	LOAD VA	RUN AMPS	QTY RUN	RUN VA
50 WELL PUMP	65	1	54,040		1	54,040
PANELBOARD LP-1	10.2		8,507			8,507
SUBTOTAL	75.2		62,547	75		62,547
DIVERSITY FACTOR			100 %			
50 HP Largest motor @ 25% additional				54,040	0.25	13,510
TOTAL						76,057
/ 480 V, 3 Phase 4 Wire Service Amps =	91.5 Amps 1.25 Multiplier					
Service Size =	114.4 Amps					
Main Size =	200.0 Amps					
% Main Load =	57.2%					

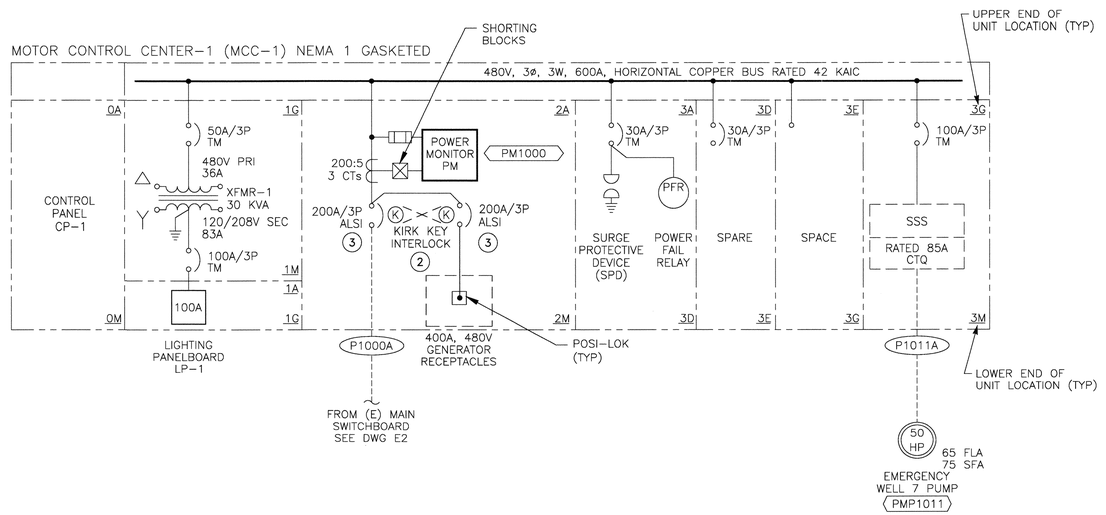

MCC-1 ONE LINE DIAGRAM (1)

NOTES:
1. ALL LUGS SHALL BE COPPER. SIZE FOR WIRES LISTED IN "CONDUIT & WIRE SCHEDULE".
2. KIRK KEY INTERLOCK ALLOWING ONLY ONE SOURCE TO BE ENERGIZED AT A TIME.
3. BREAKER TO HAVE ARCFLASH REDUCTION, LONG, SHORT DELAY AND INSTANTANEOUS (ALSI) ADJUSTABLE TRIP UNITS.

T.E.E.M.
(916) 457-8144

© MARCH 2017
ATEEM ENGINEERING
ALL RIGHTS RESERVED

Z:\ACADDWG\2016\1606d\1606de003.dwg 12/20/2019 12:20 PM ATEEM

11/22/2019

REGISTERED PROFESSIONAL ENGINEER
NO. 13698
Exp.6-30-2020
ELECTRICAL
STATE OF CALIFORNIA

City of Santa Rosa
Transportation & Public Works

NO.	DATE	REVISION	BY

SCALE: AS SHOWN
DWN BY: ZKV
DATE: NOVEMBER 2019
CHK BY: SMK
APPROVED: Deputy Director - Engineering
By Lori Urbanek, PE Date 1/24/20

CITY OF SANTA ROSA
EMERGENCY WELL 7

MCC-1
ONE LINE DIAGRAM, E3

CONTRACT NO. C01965
SHEET 24 OF 42
FILE NO. 2017-0023

EMERGENCY WELL 7

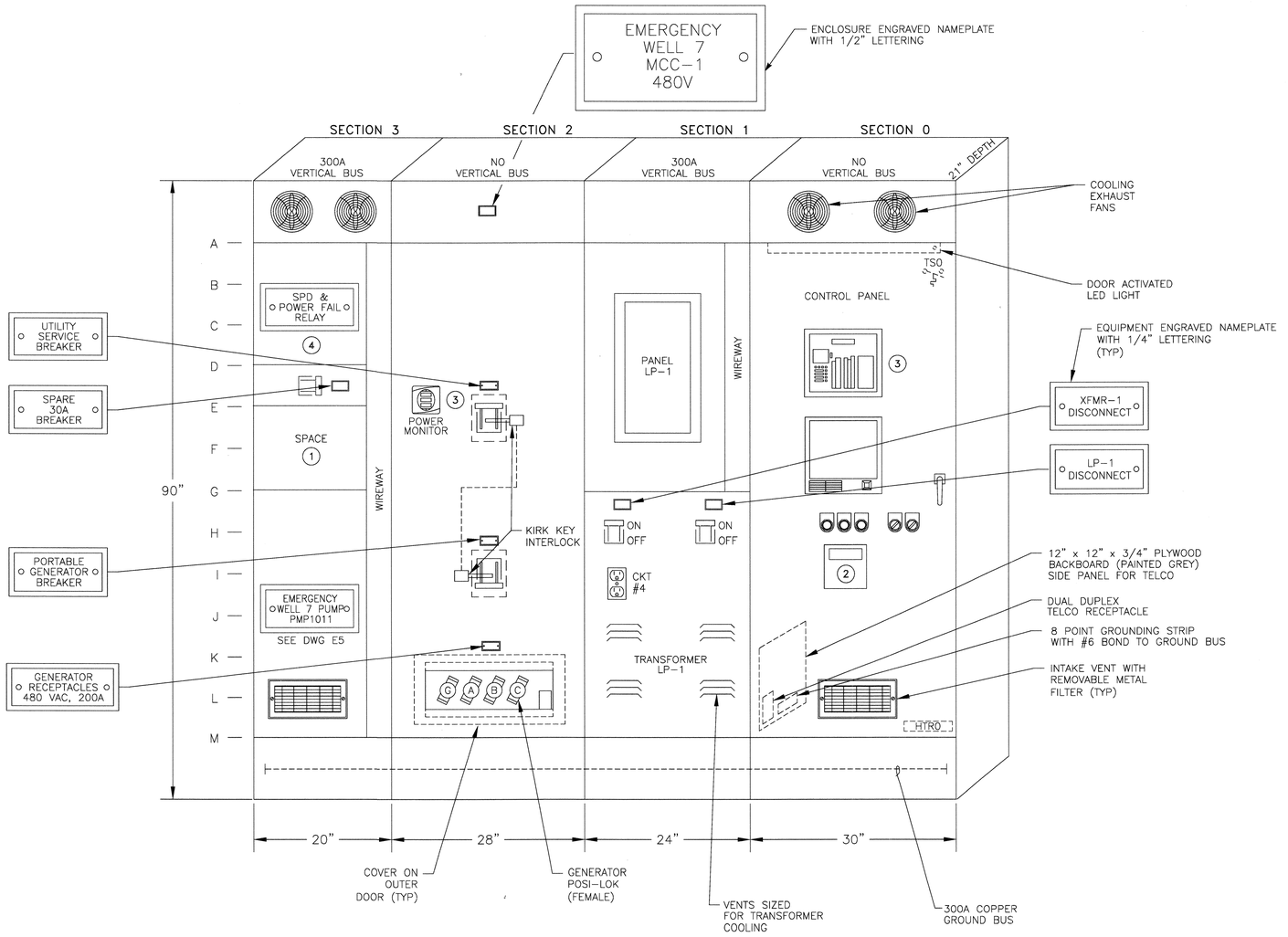

MCC-1 ELEVATION

NOT TO SCALE

NOTES:
1. EACH SPACE LOCATION TO HAVE DRAW OUT BUCKET WITH BLANK DOOR.
2. FLOW TRANSMITTER SHALL BE INSTALLED IN METAL RECESS BOX FOR TRANSMITTER TO BE FLUSH WITH PANEL DOOR.
3. TOP OF EQUIPMENT TO BE MAXIMUM 66" ABOVE FINISHED FLOOR.
4. PROVIDE LEXAN WINDOW ON DOOR TO VIEW DEVICES IN BUCKET.

T.E.E.M.
(916) 457-8144

© MARCH 2017
ATEEM ENGINEERING
ALL RIGHTS RESERVED

Z:\ACADDWG\2016\1606d\1606de004.dwg 12/20/2019 12:21 PM ATEEM

11/22/2019

REGISTERED PROFESSIONAL ENGINEER — No. 15698 — Exp 8-30-2020 — ELECTRICAL — STATE OF CALIFORNIA

City of Santa Rosa
Transportation & Public Works

NO.	DATE	REVISION	BY

SCALE: AS SHOWN
DWN BY: ZKV
DATE: NOVEMBER 2019
CHK BY: SMK

APPROVED: *Deputy Director – Engineering*
By Lori Urbanek, PE Date 1/24/20

CITY OF SANTA ROSA
EMERGENCY WELL 7

MCC-1 ELEVATION, E4

CONTRACT NO. C01965
SHEET 25 OF 42
FILE NO. 2017-0023

EMERGENCY WELL 7

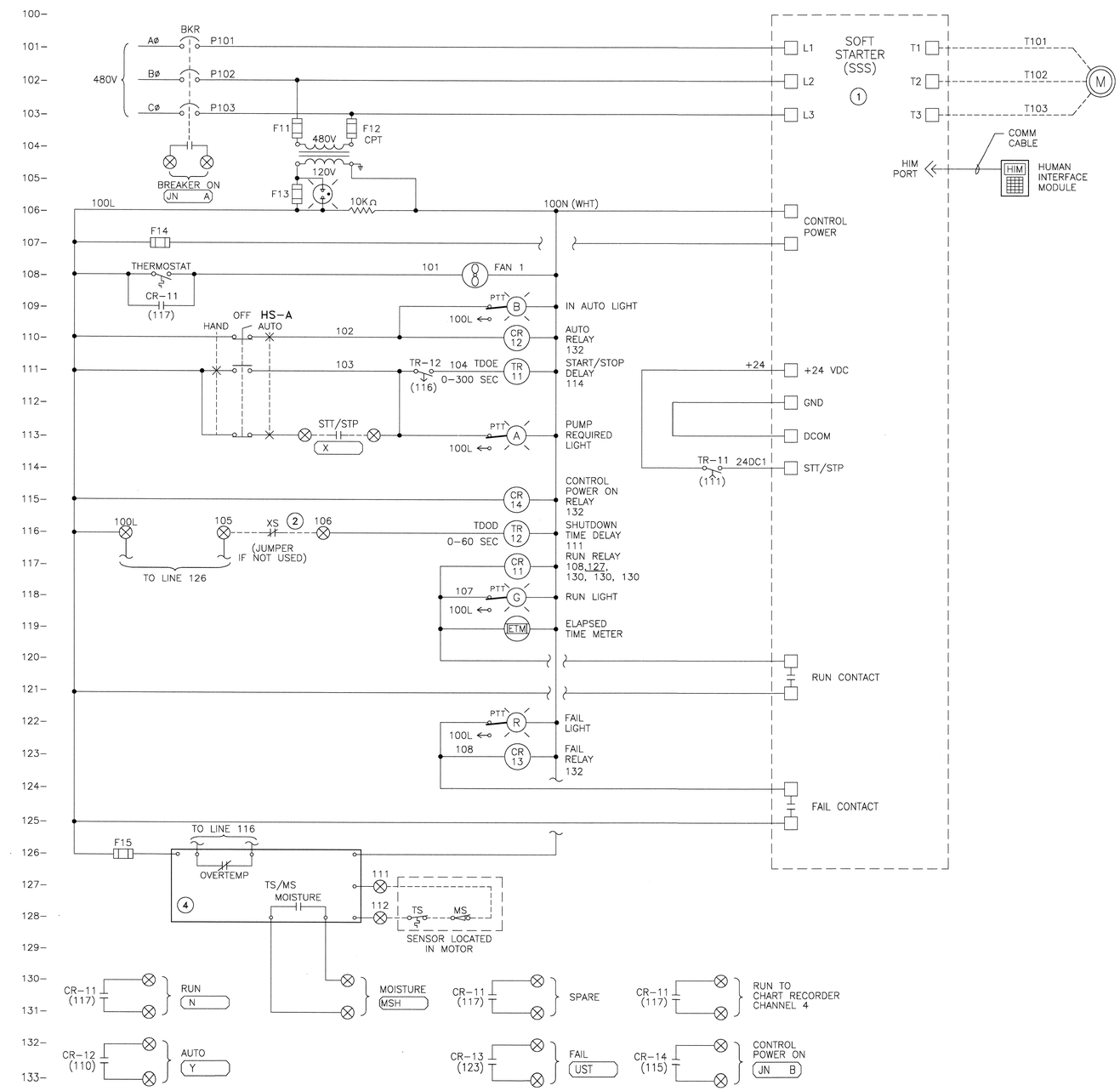

PUMP ELEMENTARY DIAGRAM

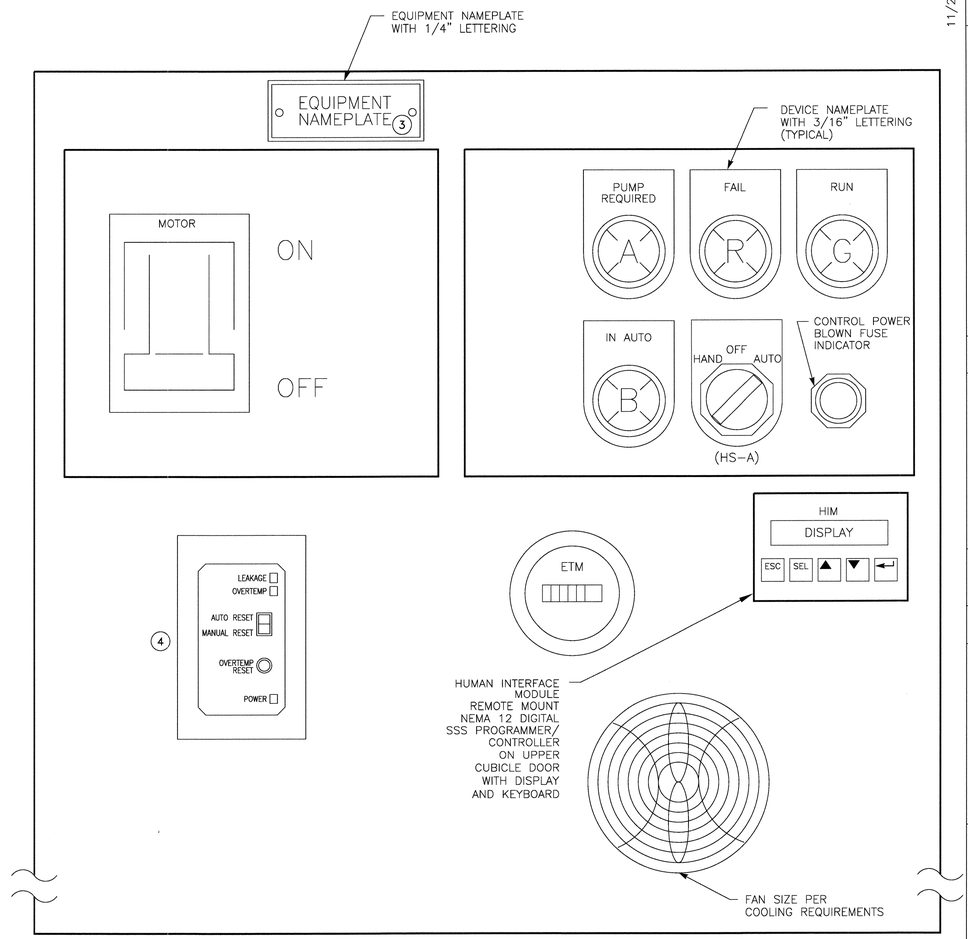

MCC CUBICLE LAYOUT

NOT TO SCALE

NOTES:

1. BUILT IN PHASE REVERSAL, PHASE LOSS & UNDER VOLTAGE AND OVERLOAD PROTECTION PROVIDE LINE & LOAD MOUNTED PROTECTIVE MODULES.
2. REMOTE SHUTDOWN XS => LSLL, ZSHH, PSHH, ETC., PER P&ID, JUMPER IF NOT USED. THESE ARE TO BE CONTACTS OFF OF AUXILIARY RELAY CONTACTS LOCATED IN MCC CONTROL PANEL DRIVEN FROM FIELD DEVICE.
3. EQUIPMENT NAMEPLATE TO CONTAIN EQUIPMENT DESCRIPTION AND EQUIPMENT NUMBER PER ELEVATION DIAGRAM.
4. INSTALL MOISTURE RELAY AND ASSOCIATED DEVICES SUPPLIED WITH PUMP.

T.E.E.m.
(916) 457-8144

© MARCH 2017
ATEEM ENGINEERING
ALL RIGHTS RESERVED

Z:\ACADDWG\2016\1606d\1606de005.dwg 11/25/2019 2:38 PM ATEEM

11/22/2019

REGISTERED PROFESSIONAL ENGINEER JOHN M. KIMMEY No. 15695 Exp.6-30-2020 ELECTRICAL STATE OF CALIFORNIA

City of Santa Rosa
Transportation & Public Works

NO.	DATE	REVISION	BY

DATE: NOVEMBER 2019
CHK BY: SMK
SCALE: AS SHOWN
DWN BY: ZKV
APPROVED: Deputy Director – Engineering
By: Lori Urbanek, PE
Date: 1/24/20

CITY OF SANTA ROSA
EMERGENCY WELL 7

PUMP ELEMENTARY DIAGRAM, E5

CONTRACT NO. C01965
SHEET 26 OF 42
FILE NO. 2017-0023

EMERGENCY WELL 7

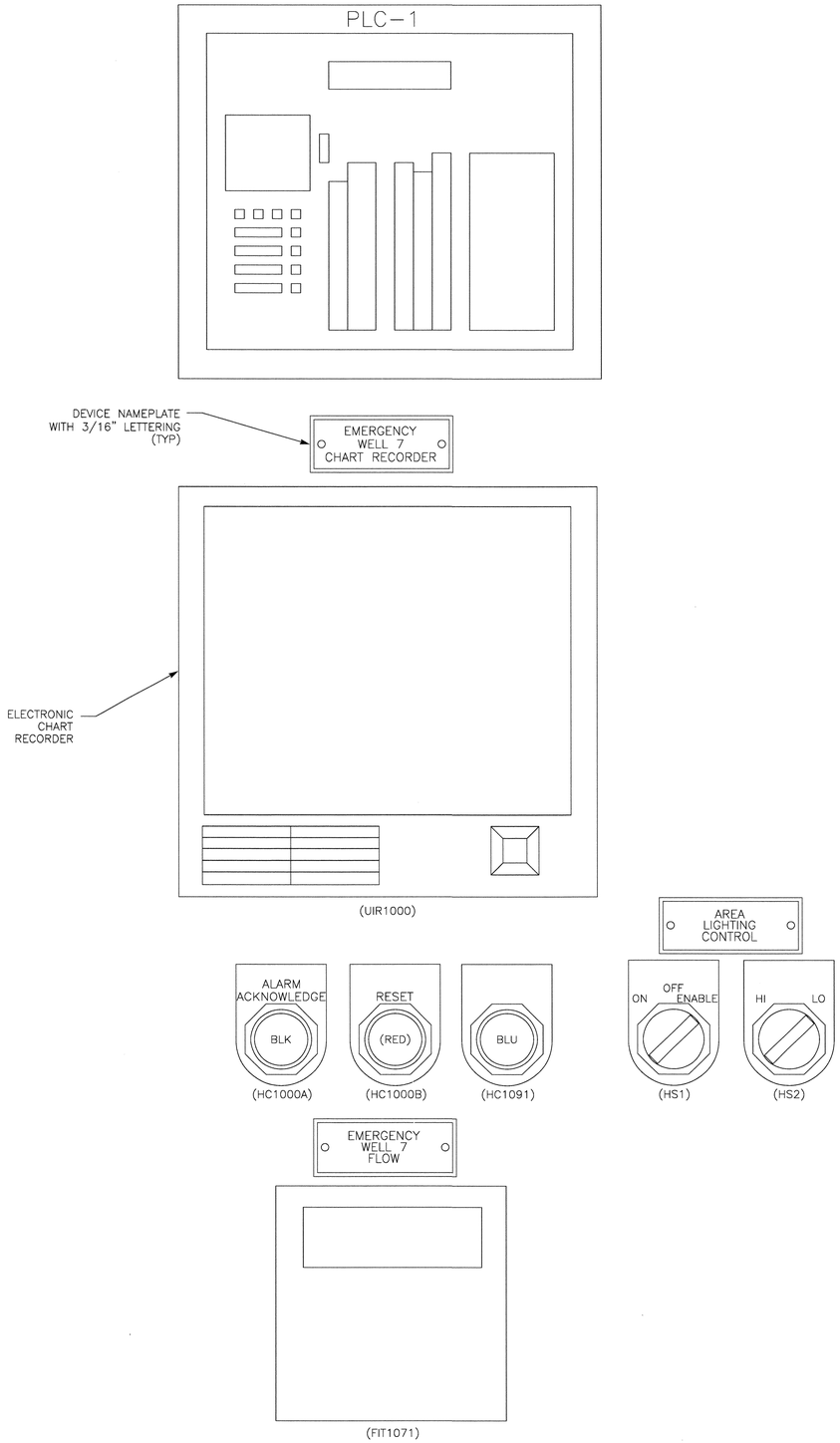

CONTROL PANEL LAYOUT

NOT TO SCALE

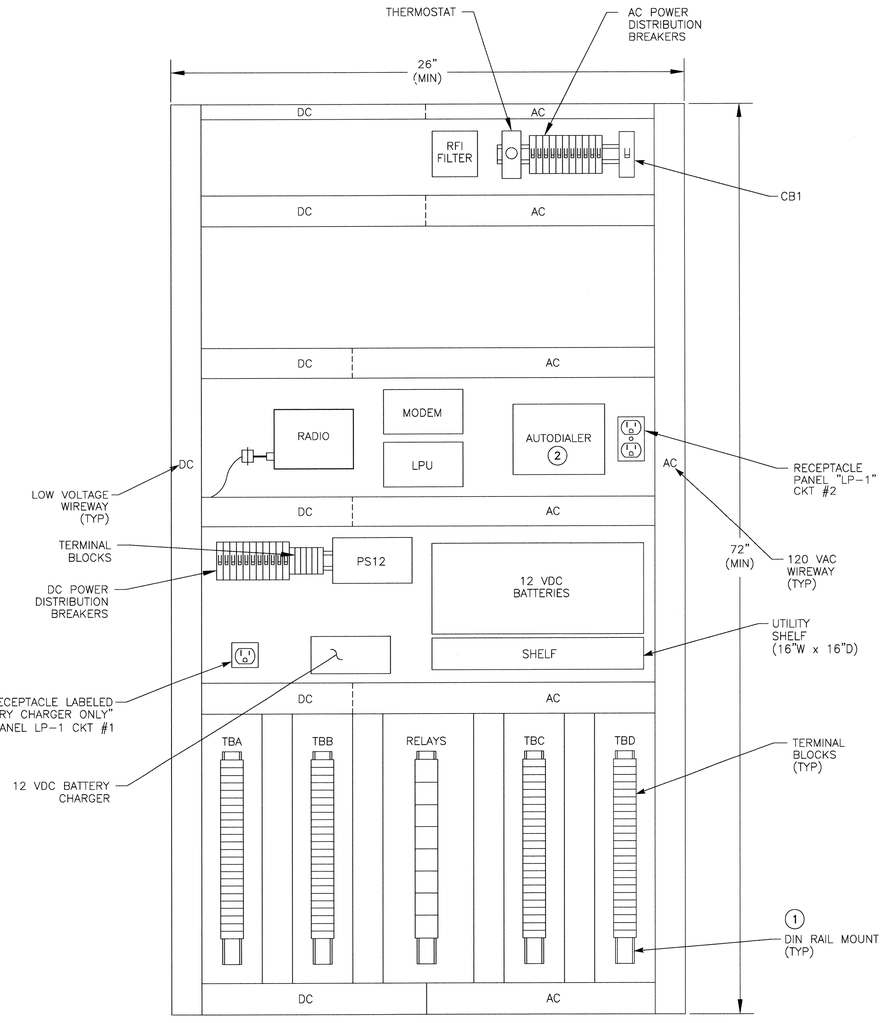

BACKPAN LAYOUT

NOT TO SCALE

NOTES:
1. PROVIDE ADDITIONAL DIN RAIL TO ADD A MINIMUM OF EIGHT TERMINAL BLOCKS TO EACH TERMINAL STRIP.
2. PROVIDE SPACE FOR CITY TO INSTALL AUTODAILER. COORDINATE WITH CITY TO PROVIDE DRY CONTACTS AS REQUIRED.

T.E.E.M.
(916) 457-8144

© MARCH 2017
ATEEM ENGINEERING
ALL RIGHTS RESERVED

Z:\ACADDWG\2016\1606d\1606de006.dwg 11/25/2019 2:37 PM ATEEM

11/22/2019

REGISTERED PROFESSIONAL ENGINEER
JOHN M. KIMYONOK
NO. 15698
Exp.6-30-2020
ELECTRICAL
STATE OF CALIFORNIA

City of Santa Rosa
Transportation & Public Works

NO.	DATE	REVISION	BY

SCALE: AS SHOWN
DATE: NOVEMBER 2019
DWN BY: ZKV
CHK BY: SMK
APPROVED: Deputy Director - Engineering
By Lori Urbanek, PE
Date 1/24/20

CITY OF SANTA ROSA
EMERGENCY WELL 7

CONTROL PANEL
ELEVATION & LAYOUT, E6

CONTRACT NO. C01965

SHEET 27 OF 42

FILE NO. 2017-0023

EMERGENCY WELL 7

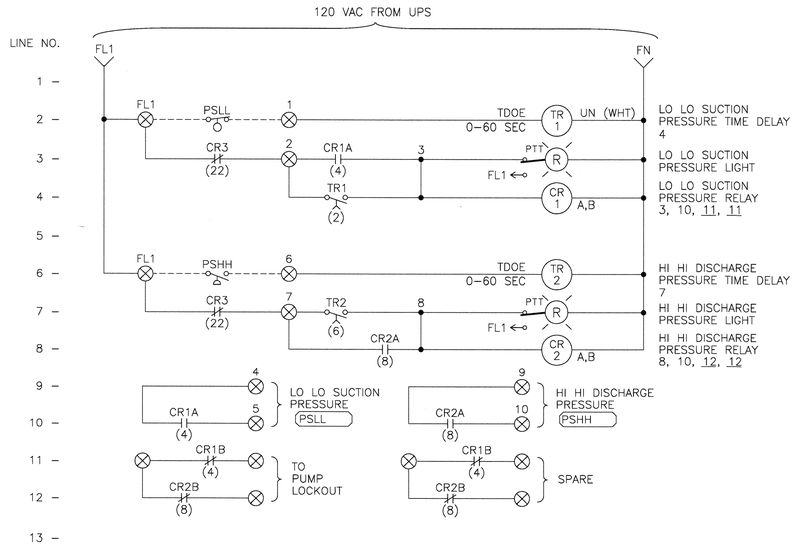

TYPICAL PUMP LOCKOUT ELEMENTARY DIAGRAM (A-1)

NOTES: (1) PUMP LOCKOUT PER P&ID.

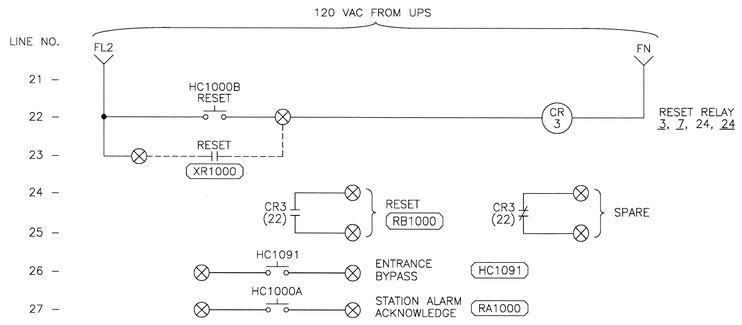

CP-1 ELEMENTARY DIAGRAM (B)

NOTES: (1) WIRES & TERMINALS LABELLED PER LOOP DIAGRAMS.

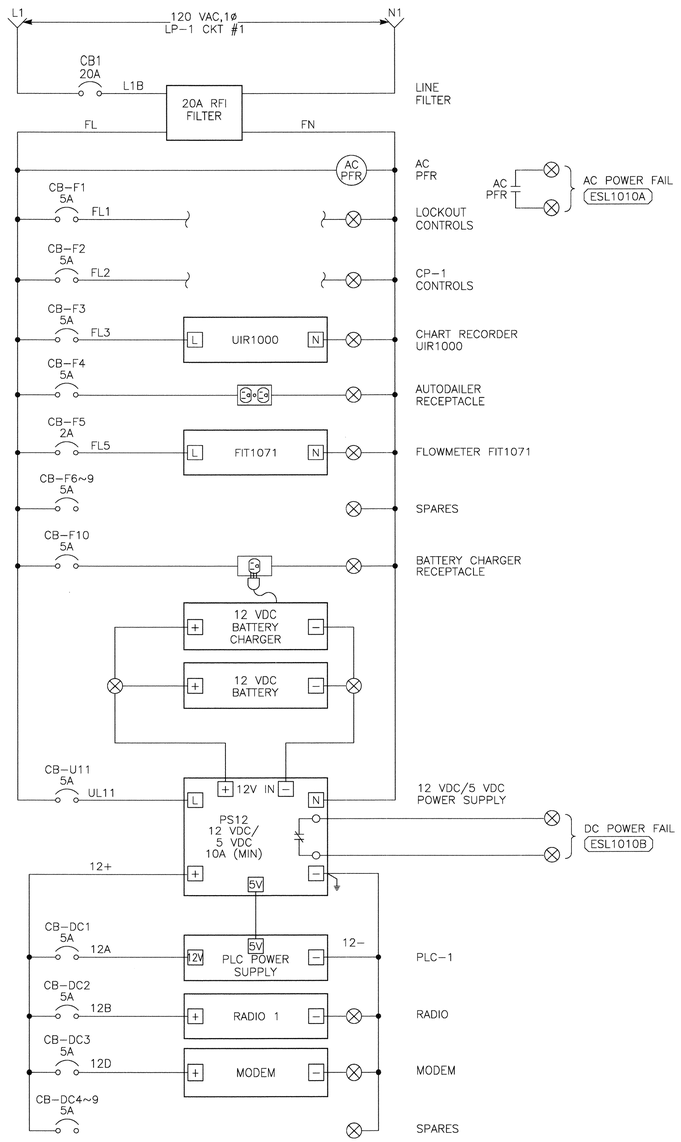

POWER DISTRIBUTION DIAGRAM (C-1)

NOTES: (1) DISTRIBUTION DIAGRAM REPRESENTATIVE OF MAJOR COMPONENTS ONLY. ADDITIONAL FUSES, CIRCUITS AND COMPONENT CONNECTIONS MAY BE REQUIRED FOR A FUNCTIONAL SYSTEM.

(2) PROVIDE & INSTALL INTERFACE RELAYS IF REQUIRED.

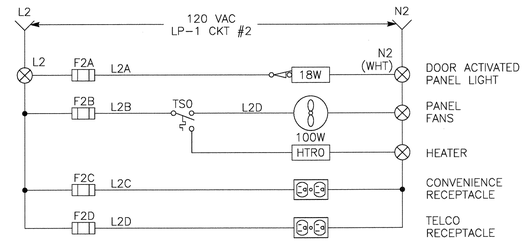

CP-1 UTILITY ELEMENTARY DIAGRAM (D)

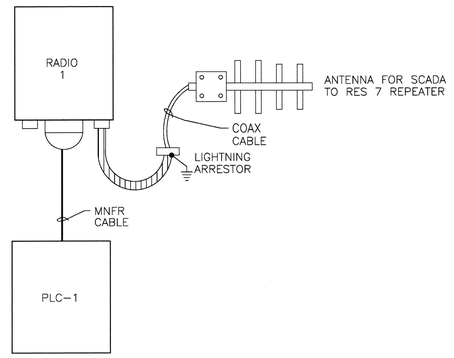

PLC BLOCK DIAGRAM (E)

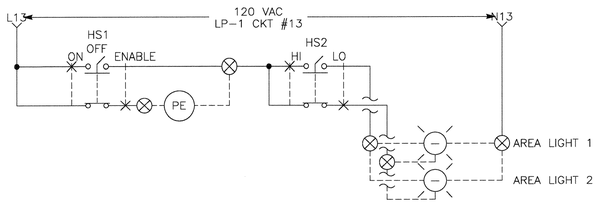

AREA LIGHTING CONTROL (F)

T.E.E.M.
(916) 457-8144
© MARCH 2017
ATEEM ENGINEERING
ALL RIGHTS RESERVED

Z:\ACADDWG\2016\1606d\1606de007.dwg 11/25/2019 2:37 PM ATEEM

11/22/2019

REGISTERED PROFESSIONAL ENGINEER — JOSEPH M. KINNEY — NO. 15698 — Exp.6-30-2020 — ELECTRICAL — STATE OF CALIFORNIA

City of Santa Rosa
Transportation & Public Works

NO.	DATE	REVISION	BY

DATE: NOVEMBER 2019 CHK BY: SMK
SCALE: AS SHOWN DWN BY: ZKV
APPROVED: Deputy Director – Engineering
By Date 1/24/20
Lori Urbanek, PE

CITY OF SANTA ROSA
EMERGENCY WELL 7

CONTROL PANEL ELEMENTARY DIAGRAMS, E7

CONTRACT NO. C01965
SHEET 28 OF 42
FILE NO. 2017-0023

EMERGENCY WELL 7

NOTES:

1. CONDUIT SIZE & TYPE; WIRE FILL FOR CONDUITS TO BE DESIGNATED NEXT TO CONDUIT NUMBER ELLIPSE.
2. THESE ARE THE CONTRACTOR DESIGNATED DRAWING NUMBERS.
3. NOT MORE THAN TWO WIRES PER TERMINAL BLOCK.
4. ALL TERMINAL BLOCKS TO BE PLACED IN NUMERICAL ORDER.
5. ALL NEUTRALS SHALL BE WHITE WIRE COLOR.
6. #12 GND TO DEVICES SHALL BE BONDED TO #8 GND LUG.

REFERENCE DOCUMENTS

DRAWING #	DESCRIPTION	MANUFACTURER
P712	P&ID DIAGRAM	DESIGN
E717	ELECTRICAL SITE PLAN	DESIGN
PAGE 32, 36	CONDUIT AND CABLE SCHEDULE	DESIGN
(2) 1354-11	LOOP DIAGRAM	CONTRACTOR
(2) 1354-68	ELEMENTARY DIAGRAM	CONTRACTOR

TYPICAL CONDUIT MARKING SYSTEM

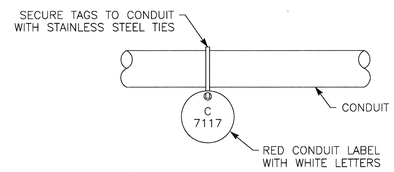

TYPICAL WIRE LABEL

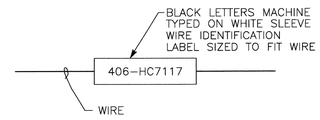

EQUIPMENT | FIELD | MCC-4 SECTION 1 CUBICLE A~E | CONTROL PANEL NO.2

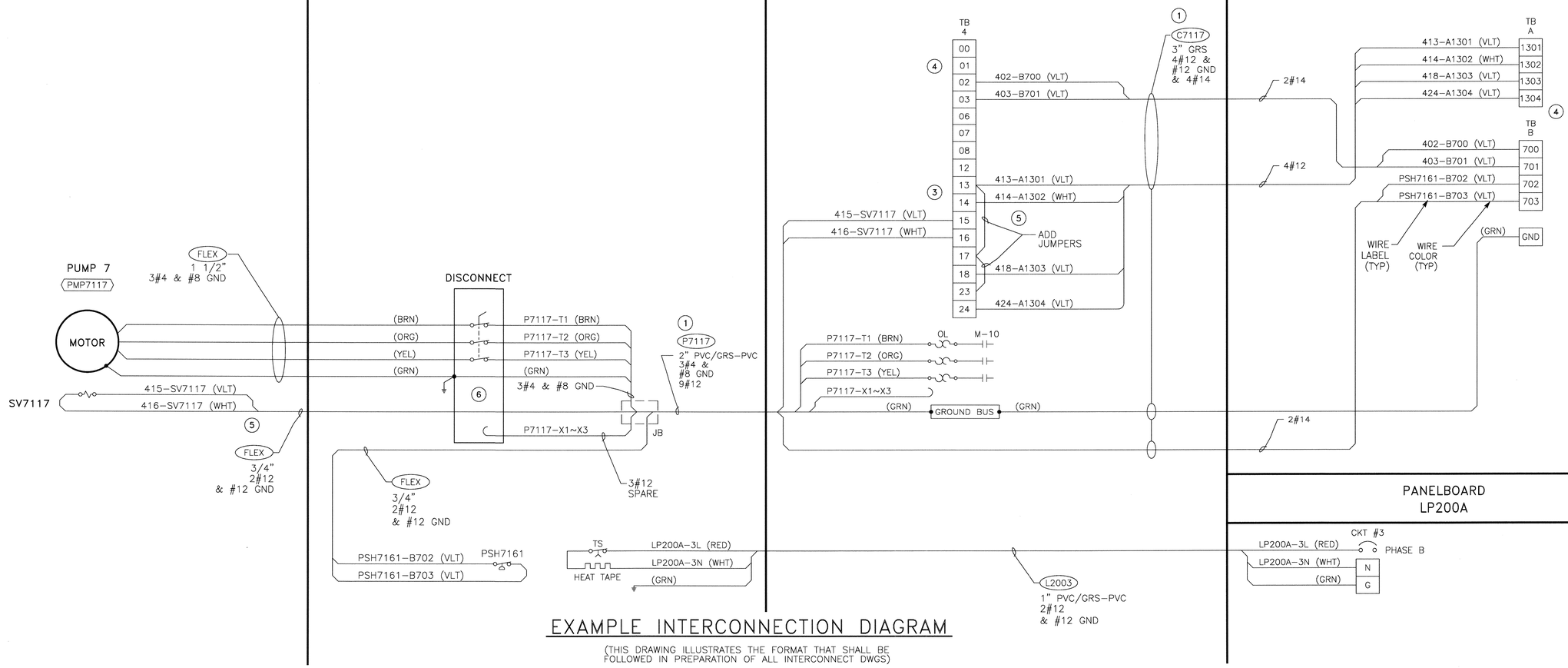

EXAMPLE INTERCONNECTION DIAGRAM

(THIS DRAWING ILLUSTRATES THE FORMAT THAT SHALL BE FOLLOWED IN PREPARATION OF ALL INTERCONNECT DWGS)

T.E.E.M.
(916) 457-8144

© MARCH 2017
ATEEM ENGINEERING
ALL RIGHTS RESERVED

Z:\ACADDWG\2016\1606d\1606de010.dwg 11/25/2019 2:37 PM ATEEM

11/22/2019

REGISTERED PROFESSIONAL ENGINEER — JOHN M. KINNEY — NO. 15698 — Exp.6-30-2020 — ELECTRICAL — STATE OF CALIFORNIA

City of Santa Rosa
Transportation & Public Works

NO.	DATE	REVISION	BY

DATE: NOVEMBER 2019 CHK BY: SMK

SCALE: AS SHOWN DWN BY: ZKV

APPROVED: Deputy Director - Engineering
By Lori Urbanek, PE Date 1/24/20

CITY OF SANTA ROSA
EMERGENCY WELL 7

EXAMPLE INTERCONNECT DIAGRAM, E10

CONTRACT NO. C01965
SHEET 29 OF 42
FILE NO. 2017-0023

EMERGENCY WELL 7

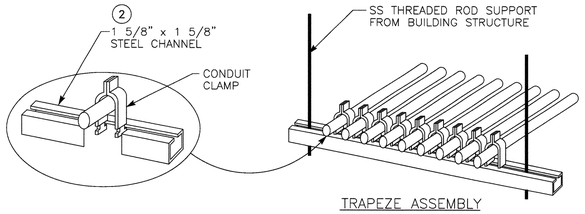

TRAPEZE ASSEMBLY

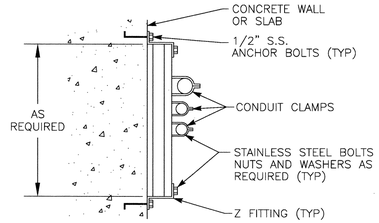

CONDUIT SUPPORT

CONDUIT PIPE STRAP MOUNTING DETAIL

NOT TO SCALE — A VAR — 1 3

NOTES:
1. THIS DETAIL TYPICAL FOR BOTH VERTICAL AND HORIZONTAL MOUNTING.
2. CHANNEL AND ALL SUPPORT DEVICES TO BE RATED PER AREA CLASSIFICATION. FIELD COAT ALL CUTS, ETC. TO MATCH.
3. CHANNELS TO BE SPACED 5' MAXIMUM.

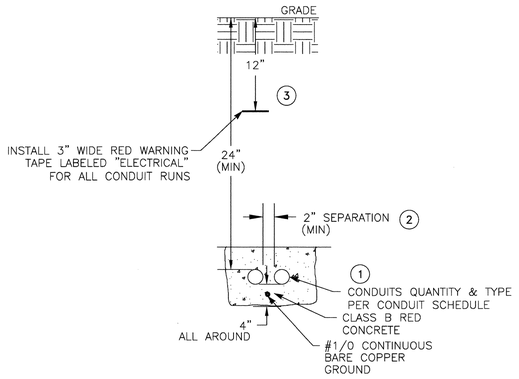

ENCASED CONDUITS DETAIL

NOT TO SCALE — B VAR

NOTES:
1. PLACE CONDUIT RUNS OF 4 CONDUITS OR GREATER IN PLASTIC SPACERS (RATED FOR DIRECT BURIAL) EVERY 5' ALONG LENGTH OF RUN.
2. PROVIDE 12" (MIN) SEPARATION BETWEEN "A, C & D" TYPE GROUP AND "E, L & P" TYPE GROUP CONDUITS. PROVIDE 12" SEPARATION OF "H" PREFIXED CONDUITS FROM ALL OTHER NON "H" PREFIXED CONDUITS.
3. TRENCHING & COMPACTED BACKFILL PER STANDARD SPECIFICATIONS.

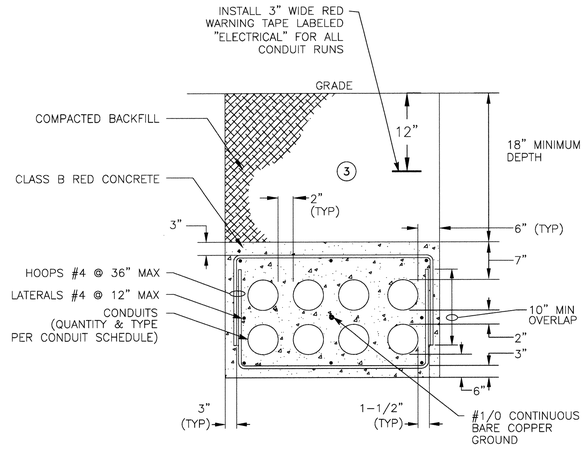

DUCT BANK DETAIL

NOT TO SCALE — C VAR — 2

NOTES:
1. PLACE CONDUIT RUNS OF 4 CONDUITS OR GREATER IN PLASTIC SPACERS (RATED FOR DIRECT BURIAL) EVERY 5' ALONG LENGTH OF RUN.
2. PROVIDE 12" (MIN) SEPARATION BETWEEN "A, C & D" TYPE GROUP AND "E, L & P" TYPE GROUP CONDUITS. PROVIDE 12" SEPARATION OF "H" PREFIXED CONDUITS FROM ALL OTHER NON "H" PREFIXED CONDUITS.
3. TRENCHING & COMPACTED BACKFILL PER SPECIFICATIONS.

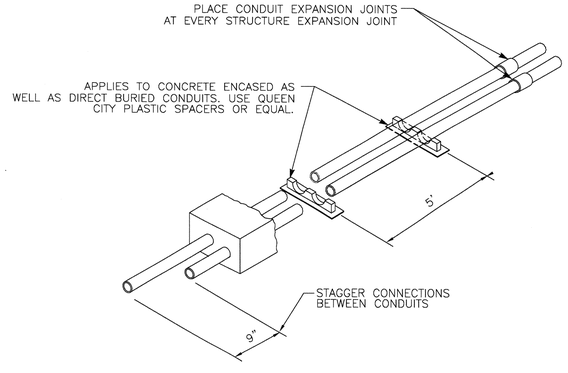

SPACERS AND JOINT INSTALLATION DETAIL

NOT TO SCALE — D VAR

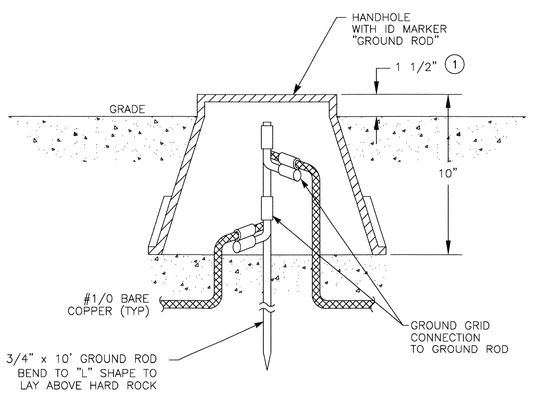

HANDHOLE GROUNDING DETAIL

NOT TO SCALE — E E30B

NOTES: 1. FLUSH IN PAVED AREAS.

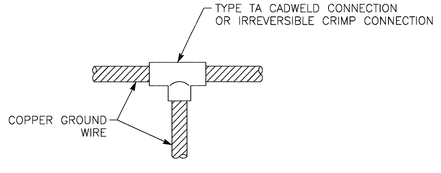

GROUND CABLE CONNECTION DETAIL

NOT TO SCALE — F E30B

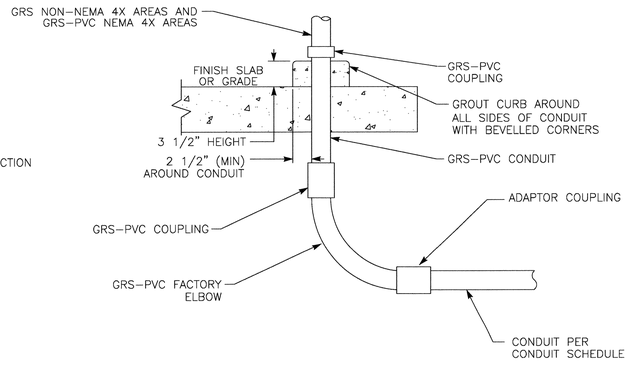

EXPOSED CONDUIT TRANSITION DETAIL

NOT TO SCALE — G VAR

T.E.E.M.
(916) 457-8144

© MARCH 2017
ATEEM ENGINEERING
ALL RIGHTS NONE RESERVED

Z:\ACADDWG\2016\1606d\1606de011.dwg 11/25/2019 2:37 PM ATEEM

REGISTERED PROFESSIONAL ENGINEER — KEVIN M. KINNEY — NO. 15698 — Exp 6-30-2020 — ELECTRICAL — STATE OF CALIFORNIA

11/22/2019

City of Santa Rosa — Transportation & Public Works

NO.	DATE	REVISION	BY

DATE: NOVEMBER 2019 — CHK BY: SMK

SCALE: AS SHOWN — DWN BY: ZKV

APPROVED: Deputy Director - Engineering
By Lori Urbanek, PE — Date 1/24/20

CITY OF SANTA ROSA
EMERGENCY WELL 7

TYPICAL ELECTRICAL DETAILS NO.1, E11

CONTRACT NO. C01965

SHEET 30 OF 42

FILE NO. 2017-0023

EMERGENCY WELL 7

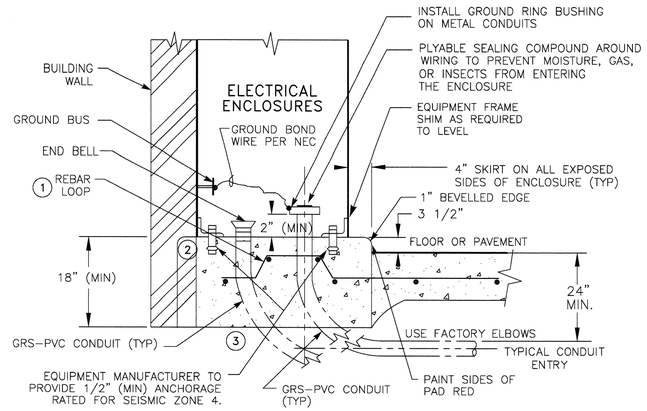

EQUIPMENT CONCRETE PAD DETAIL

NOT TO SCALE — A / E30B

NOTES:
1. CONCRETE PAD ABOVE FLOOR TO BE POURED AFTER MAIN PAD HAD BEEN POURED. PAD ABOVE FLOOR TO BE CLASS "A" CONCRETE COMPOSITION ACCURATELY LEVELED WITHIN 1/16 INCH. REBAR TO BE #4 @ 12" CROSSWAYS & VERTICAL EVERY 6" (MINIMUM) OR AS CALLED OUT IN STRUCTURAL DRAWINGS.
2. IF NO BUILDING WALL EXTEND PAD 4" BEYOND ENCLOSURE ON BACK & SIDES.
3. CONCRETE DUCT BANKS SHALL EXTEND & CONNECT INTO EQUIPMENT CONCRETE PAD.

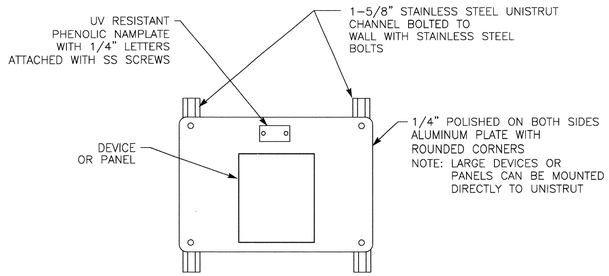

WALL PLATE SUPPORT DETAIL

NOT TO SCALE — B / VAR

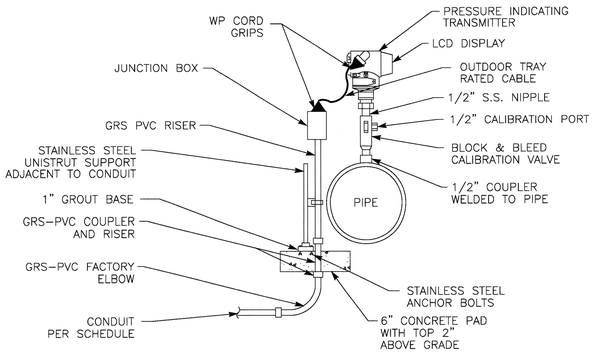

PRESSURE TRANSMITTER DETAIL

NOT TO SCALE — C / E30C

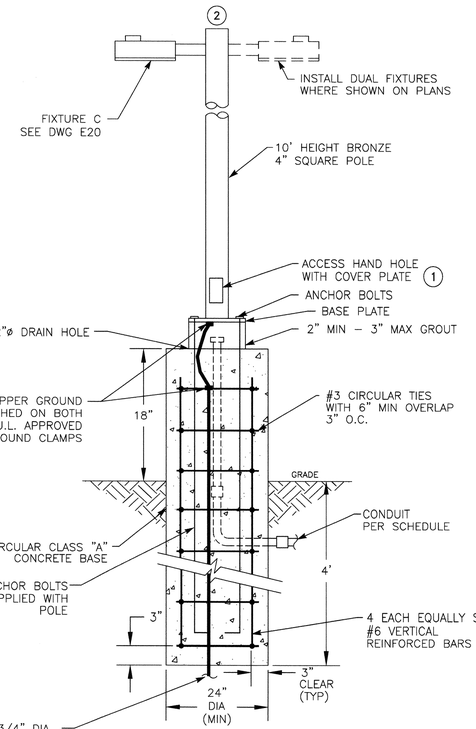

POLE MOUNTED LIGHT DETAIL

NOT TO SCALE — D / E22

NOTES:
1. PROVIDE 2 POLE FUSE HOLDER WITH FUSES & RUBBER BOOTS ON LIGHT WIRING FEED INSIDE HANDHOLE.
2. COORDINATE FIXTURE ORIENTATION WITH OWNER.

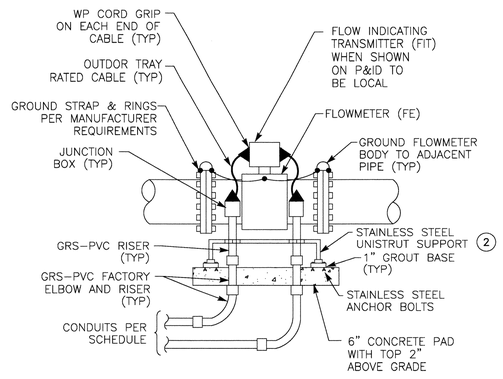

ABOVE GRADE FLOWMETER DETAIL

NOT TO SCALE — E / E30C

NOTES:
1. SIMILAR INSTALLATION SHALL BE USED FOR VERTICAL PIPES.
2. SUPPORT WITH TWO HOLE BASE ON EACH SIDE AND HEIGHT OF HORIZONTAL UNISTRUT SUPPORT TO BE 12" MINIMUM.

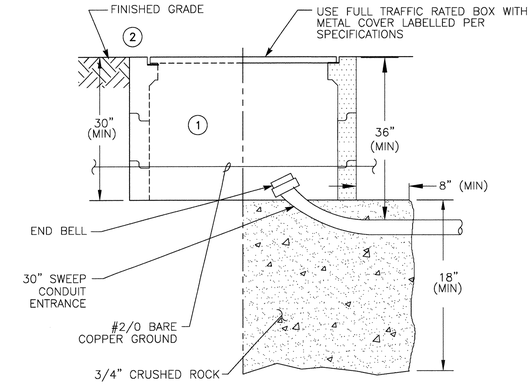

PULL BOX DETAIL

NOT TO SCALE — F / E21 — 3

NOTES:
1. TRAFFIC RATED CHRISTY "B" SERIES OR EQUAL PER CITY'S STANDARD, MINIMUM BOX SIZE PER PLANS. PROVIDE LARGER AT NO ADDTIONAL COST TO OWNER.
2. ADD EXTENSIONS WHERE NECESSARY TO RAISE COVER TO FINISHED GRADE.
3. GROUND COVER FRAME, COVER AND OTHER EXPOSED METAL PARTS TO #2/0 BARE COPPER GROUND CABLE.

T.E.E.M.
(916) 457-8144
© MARCH 2017
ATEEM ENGINEERING
ALL RIGHTS RESERVED

Z:\ACADDWG\2016\1606d\1606de012.dwg 12/20/2019 1:15 PM ATEEM

11/22/2019

REGISTERED PROFESSIONAL ENGINEER — JOHN M. KIMLEY — NO. 15698 — Exp.6-30-2020 — ELECTRICAL — STATE OF CALIFORNIA

City of Santa Rosa — Transportation & Public Works

NO.	DATE	REVISION	BY

SCALE: AS SHOWN
DWN BY: ZKV
DATE: NOVEMBER 2019
CHK BY: SMK

APPROVED: Deputy Director – Engineering
By _____ Date 1/24/20
Lori Urbanek, PE

CITY OF SANTA ROSA
EMERGENCY WELL 7

TYPICAL ELECTRICAL DETAILS NO.2, E12

CONTRACT NO. C01965
SHEET 31 OF 42
FILE NO. 2017-0023

EMERGENCY WELL 7

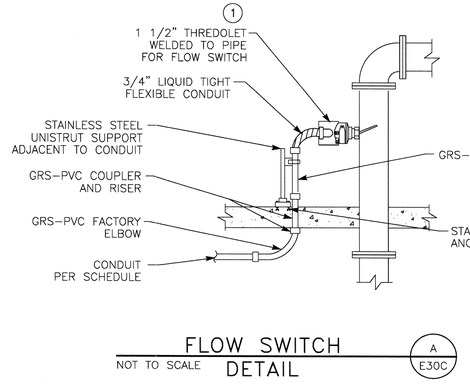

FLOW SWITCH DETAIL (A / E30C)

NOT TO SCALE

NOTE: (1) LOCATE ON HORIZONTAL OR VERTICAL PIPE AS SHOWN ON MECHANICAL PLAN.

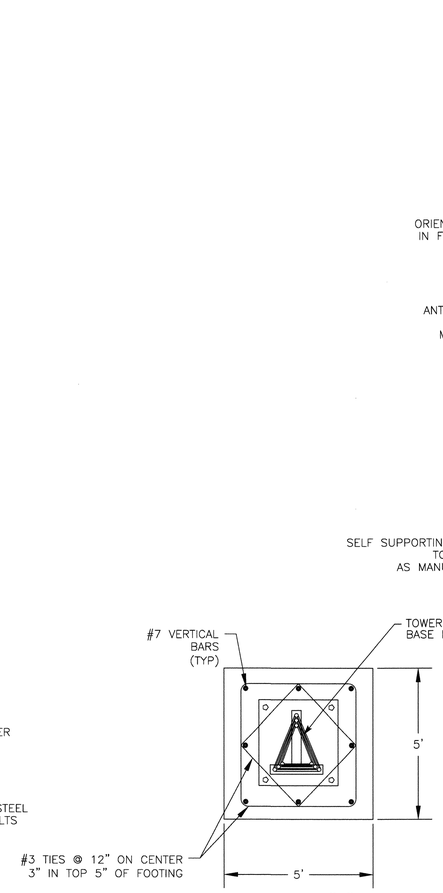

SECTION "A"

NOT TO SCALE

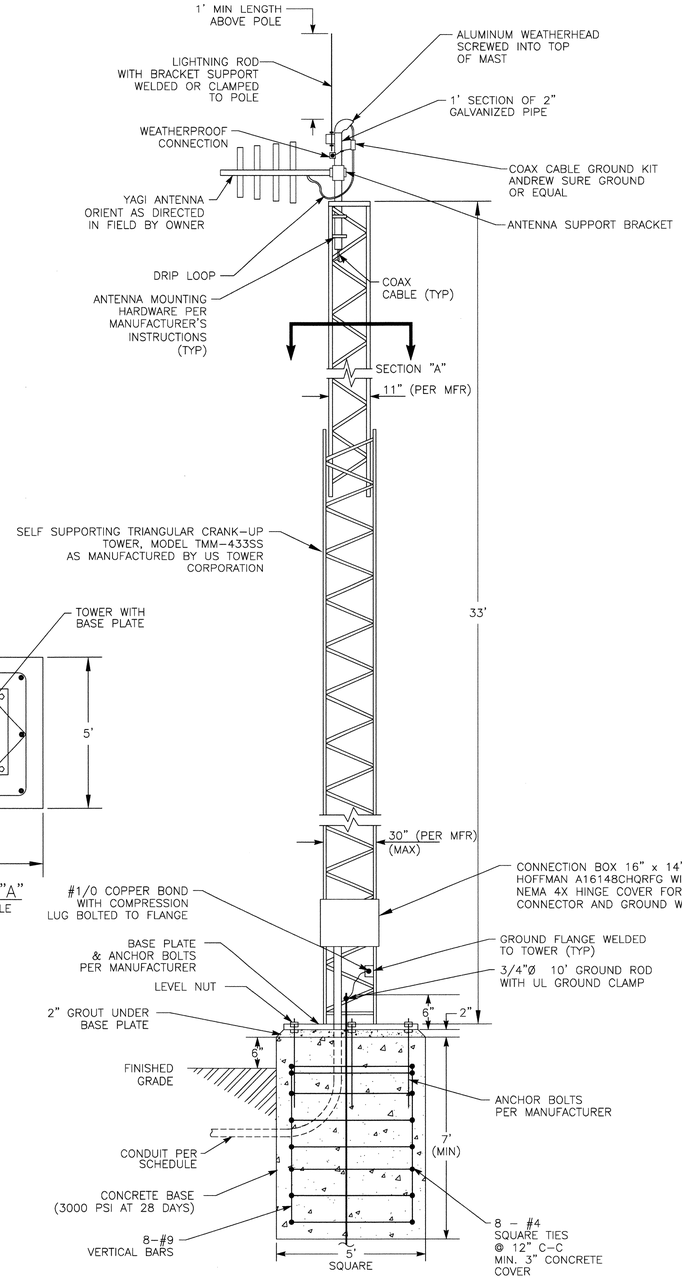

ANTENNA INSTALLATION DETAIL (B / E30C) (1)

NOT TO SCALE

NOTES: (1) ANTENNA TOWER SHALL BE WIND DESIGN PER CBC USING BASIC WIND SPEED OF 115 MPH (85 MPH ALLOWABLE STRESS) AND EXPOSURE CATEGORY C.

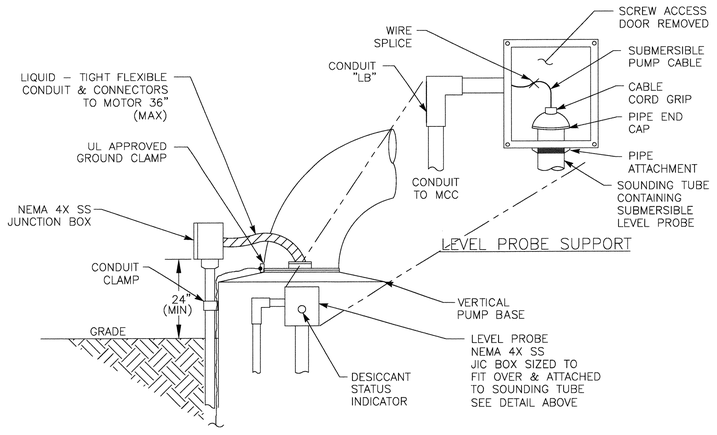

WELL PUMP CONNECTION DETAIL (C / E30C) (1)

NOT TO SCALE

NOTES: (1) SEE MECHANICAL DETAILS FOR WELL PUMP INSTALLATION DETAILS.

T.E.E.M.
(916) 457-8144

© MARCH 2017
ATEEM ENGINEERING
ALL RIGHTS RESERVED

Z:\ACADDWG\2016\1606d\1606de013.dwg 12/20/2019 12:24 PM ATEEM

REGISTERED PROFESSIONAL ENGINEER — SCOTT M. KINNEY — No. 13698 — Exp.6-30-2020 — ELECTRICAL — STATE OF CALIFORNIA

11/22/2019

City of Santa Rosa
Transportation & Public Works

NO.	DATE	REVISION	BY

SCALE: AS SHOWN
DWN BY: ZKV
DATE: NOVEMBER 2019
CHK BY: SMK

APPROVED: Deputy Director - Engineering
By Lori Urbanek, PE
Date 1/24/20

CITY OF SANTA ROSA
EMERGENCY WELL 7

TYPICAL ELECTRICAL DETAILS NO.3, E13

CONTRACT NO. C01965

SHEET 32 OF 42

FILE NO. 2017-0023

EMERGENCY WELL 7

LIGHTING AND FIXTURE SCHEDULE

CODE LETTER	FIXTURE TYPE	FINISH	FIXTURE LAMPS	WATTS/ FIXTURE	MANUFACTURER OR APPROVED EQUAL	MOUNTING ARRANGEMENT	NOTES
A	LED LUMINAIRE, 4 FT, CODE-GAUGE STEEL LINEAR-FACETED REFRACTOR W/LIGHT DIFFUSING FILM DESIGNLIGHTS CONSORTIUM QUALIFIED	WHITE	LED 4000 K 82 CRI 120 VAC	50	LITHONIA STL4-48L-EZ1-LP840	CHAIN HANGER SET 10 FT FROM FLOOR	UL LISTED FOR DAMP LOCATIONS 84 LUMENS
B	SECURITY LIGHT, SCONCE DIE-CAST ALUMINUM POWDER COAT FINISH NIGHTIME FRIENDLY PRODUCT DESIGNLIGHTS CONSORTIUM QUALIFIED	DARK BRONZE	LED 3000K 1 EACH 120 VAC	24	LITHONIA WSQ-1-10A700/30K-SR2-120- PIR-DDBXD	WALL MOUNT ON BUILDING AT 11 FT	U.L. LISTED FOR WET LOCATIONS MOTION/AMBIENT LIGHT SENSOR BUILT IN DIMMER TYPE II DISTRIBUTION
C	AREA LIGHT, POLE MOUNTED DIE-CAST ALUMINUM POWDER COAT FINISH SQUARE DAYFORM WITH SOFTENED EDGES	DARK BRONZE	LED 4000 K 70 CRI 120 VAC	108	LITHONIA KAD LED-30C-1000-40K-R4-MVOLT- SPD-06-BL50-HS-WG-DDBXD	POLE MOUNTED PER DWG E-13 DET B	UL LISTED FOR WET LOCATIONS FUSE IN HAND HOLE
E	EMERGENCY LIGHTING IMPACT RESISTANT CONTEMPORARY HOUSING REGULATED CHARGER	GRAY	3W LED 2 EACH 12 V	3	LITHONIA QUANTUM LED SERIES ELM2	WALL MOUNTED AT 8' TO BOTTOM OF FIXTURE	SEALED LEAD CALCIUM BATTERY TEST SWITCH UL LISTED FOR DAMP ENVIRONMENT

GENERAL NOTES THAT APPLY TO LIGHTING AND RECEPTACLE PLAN

1. PROVIDE AND INSTALL NECESSARY WIRES IN SURFACE MOUNT 3/4" (MIN) EMT CONDUIT FOR LIGHTING AND RECEPTACLE ARRANGEMENT AS SHOWN IN NEMA 12 AREAS. IN NEMA 4X AREAS USE GRS-PVC CONDUITS. IF CONDUITS ARE ROUTED UNDERGROUND, THE UNDERGROUND SECTION AND CONCEALED RISER TO FIRST DEVICE BOX MAY BE PVC-40.
2. DEVICE BOXES AND CONDUIT BODIES SHALL BE METALLIC. IN NEMA 4X AREAS USE SS OR PVC COATED BOXES.
3. CONDUCTORS SHALL BE COPPER TYPE THHN, #12 AWG (MINIMUM).
4. MOUNT INDIVIDUAL CONDUITS USING SINGLE BOLT SS PIPE STRAPS AND CLAMP BACK SPACERS.
5. USE SS EXPANSION WEDGE ANCHORS OR EPOXY ANCHORS AS NECESSARY FOR EQUIPMENT MOUNTING.
6. PROVIDE AND INSTALL FIXTURES PER SCHEDULE THIS PAGE, QUANTITY AS SHOWN ON THE DRAWINGS.
7. PROVIDE AND INSTALL ALL DEVICE BOXES, JUNCTION BOXES, RECEPTACLES, SWITCHES, AND COVERS.
8. DEVICES TO BE GROUND FAULT INTERRUPTER (GFI) TYPE AND WEATHERPROOF (WP) WHERE SHOWN.
9. SEE ELECTRICAL SYMBOLS AND ABBREVIATIONS DRAWING FOR SYMBOL DEFINITION.
10. ALL WORK SHALL CONFORM TO LOCAL CODES AND 2017 NATIONAL ELECTRICAL CODE.
11. PAINT CONDUITS TO MATCH COLOR OF SURFACE ATTACHED TO.

DWG REF: E3 | MOUNTING: FLUSH | VOLTS: 120 / 208 | BUS AMPS: 100A | ENTRY: BOTTOM
NAMEPLATE: LP-1 | PHASE: 3 | MAIN BKR: MLO | NEMA: 1
LOCATION: MCC - 1 | WIRE: 4 | KAIC RATING: 10 | SPD: YES

BKR NO.	LOAD DESCRIPTION	LOAD VA	LINE AMPS	BKR AMP/ POLE	BKR NO.	PHASE	BKR NO.	BKR AMP/ POLE	LINE AMPS	LOAD VA	LOAD DESCRIPTION	BKR NO.
1	CP-CONTROLS	750	6	20/1	1	A	2	20/1	3	400	CP AUXILLIARY	2
3	SPARE	0	0	20/1	3	B	4	20/1	2	180	RECEPT - MCC	4
5	LIGHTS - PUMP ROOM	300	3	20/1	5	C	6	20/1 (G)	9	1,080	RECEPT - PUMP ROOM	6
7	LIGHTS - CHEM ROOM/EXHAUST FAN	510	4	20/1	7	A	8	20/1 (G)	6	720	RECEPT - CHEM ROOM	8
9	LIGHTS - OUTSIE BLDG	48	0	20/1	9	B	10	20/1 (G)	0	0	SPARE	10
11	SPARE	0	0	20/1	11	C	12	20/1 (G)	0	0	SPARE	12
13	LIGHTS - AREA	216	2	20/1(L)	13	A	14	20/1	0	0	SPARE	14
15	SPARE	0	0	20/1	15	B	16	20/1	0	0	SPARE	16
17	SPARE	0	0	20/1	17	C	18	20/1	0	0	SPARE	18
19	AC UNIT-PUMP ROOM	936	8	20/2	19	A	20	20/1	0	0	SPARE	20
21		936	8	(H)(L)	21	B	22	15/1	1	100	CL2 RESIDUAL AIT1081	22
23	AC UNIT-CHEM ROOM	936	8	20/2	23	C	24	30/1	0	0	SPARE	24
25		936	8	(H)(L)	25	A	26	20/3	4	468	CHLORINE SKID	26
27	SPARE	0	0	20/2	27	B	28	(L)	4	468	SKD/PNL1040	28
29		0	0	(L)	29	C	30		4	468		30

PHASE	A	B	C
LEFT SIDE AMPS	28	8	10
LEFT SIDE KVA	3.35	0.98	1.24
TOTAL KVA			9.45
TOTAL AMPS @ 208V, 3P			26.2
DIVERSITY FACTOR			0.90
LOAD KVA			8.51

NEUTRAL

GROUND

A	B	C	PHASE
13	6	13	RIGHT SIDE AMPS
1.59	0.75	1.55	RIGHT SIDE KVA
3.35	0.98	1.24	LEFT SIDE KVA
4.94	1.73	2.78	TOTAL PHASE KVA
41	14	23	TOTAL PHASE AMPS
157	55	88	% OF AVERAGE

NOTES: 1. MEANS OF WIRE COLOR CODING SHALL BE POSTED ON PANELBOARD PER NEC 210.5
2. (G) INDICATES GFI BREAKER REQUIRED WITH 30 MA SENSITIVITY.
3. (H) INDICATES HACR RATED BREAKER.
4. (L) PROVIDE PADLOCKING PROVISION IN ORDER TO LOCK BREAKER IN THE OFF POSITION.

T.E.E.M.
(916) 457-8144
© MARCH 2017
ATEEM ENGINEERING
ALL RIGHTS RESERVED

Z:\ACADDWG\2016\1606d\1606de020.dwg 11/25/2019 2:36 PM ATEEM

11/22/2019

REGISTERED PROFESSIONAL ENGINEER — JASON M. KINNEY — NO. 15698 — Exp.6-30-2020 — ELECTRICAL — STATE OF CALIFORNIA

City of Santa Rosa
Transportation & Public Works

NO.	DATE	REVISION	BY

DATE: NOVEMBER 2019 | CHK BY: SMK
SCALE: AS SHOWN | DWN BY: ZKV
APPROVED: Deputy Director - Engineering
By Lori Urbanek, PE Date 1/24/20

CITY OF SANTA ROSA
EMERGENCY WELL 7

PANELBOARD, LIGHTING SCHEDULE & GENERAL NOTES, E20

CONTRACT NO. C01965
SHEET 33 OF 42
FILE NO. 2017-0023

EMERGENCY WELL 7

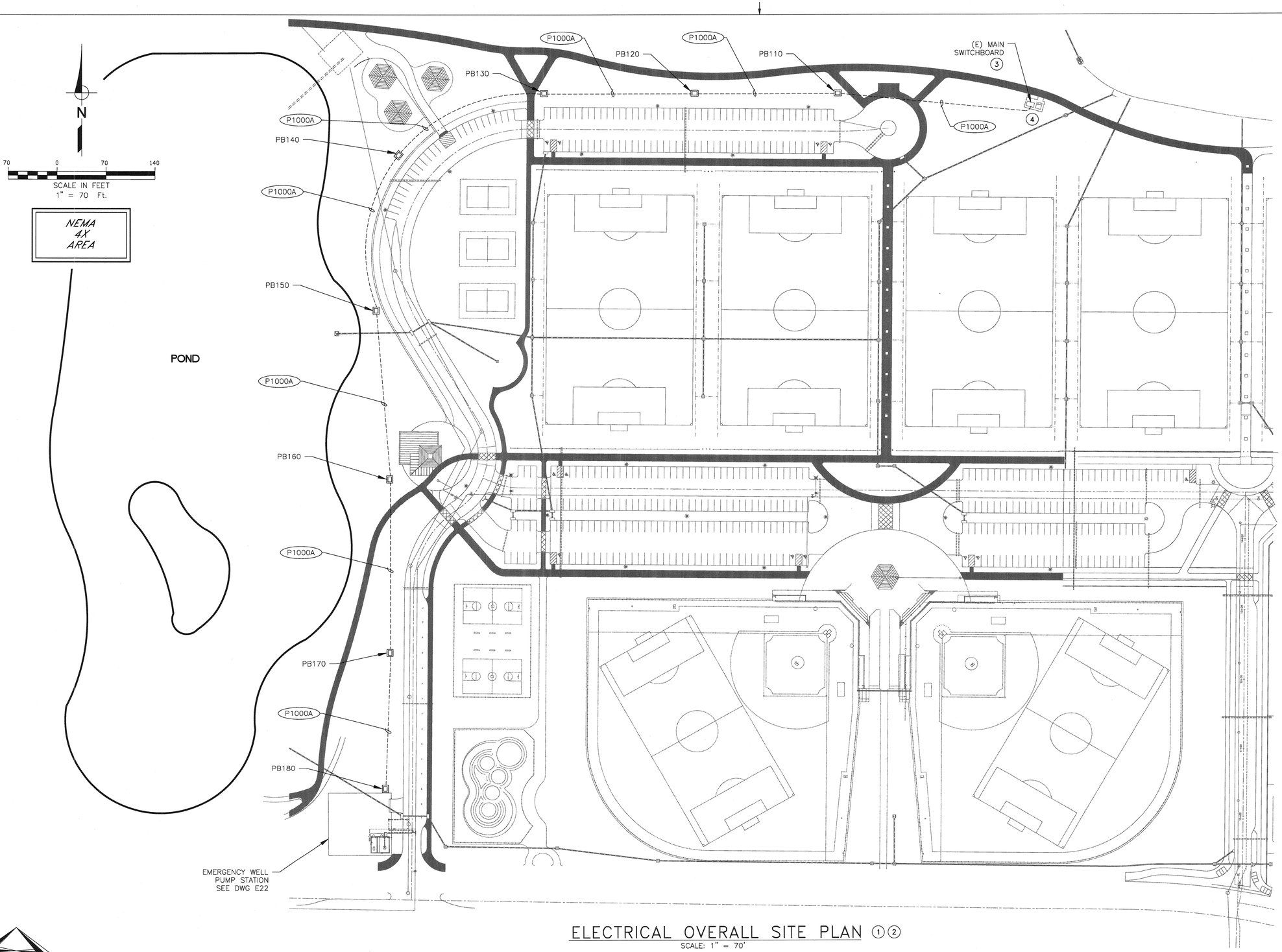

ELECTRICAL OVERALL SITE PLAN ①②

SCALE: 1" = 70'

NOTES:

① HAND DIG TRENCH ROUTE FOR UG CONDUITS IN EXISTING AREA, EXISTING UNDER GROUND SERVICES ARE NOT SHOWN & SHALL BE PROTECTED FROM DAMAGE. INSTALL UG CONDUITS PER DWG E11, DETAIL "B".

② PLACE PULL BOXES AT LOCATION DIRECTED BY FIELD ENGINEER. INSTALL MINIMUM 24" x 36" PULL BOXES PER DWG E12, DETAIL "F".

③ CLEAR AND GRUB, AND REGRADE EXISTING MAIN SWITCHBOARD ENCLOSURE WITH MINIMUM 6" AB-2 FOR WEED CONTROL.

④ PROVIDE NEMA 4X TRANSITION BOX AS REQUIRED TO ROUTE NEW CONDUIT TO (E) SWITCHBOARD.

T.E.E.m.
(916) 457-8144

© MARCH 2017
ATEEM ENGINEERING
ALL RIGHTS RESERVED

Z:\ACADDWG\2016\1606d\1606de021.dwg 11/25/2019 2:36 PM ATEEM

11/22/2019

REGISTERED PROFESSIONAL ENGINEER
KEVIN M. KIMMEL
NO. 15698
Exp.6-30-2020
ELECTRICAL
STATE OF CALIFORNIA

City of Santa Rosa
Transportation & Public Works

NO.	DATE	REVISION	BY

DATE: NOVEMBER 2019
CHK BY: SMK
SCALE: AS SHOWN
DWN BY: ZKV

APPROVED: Deputy Director – Engineering
By _____ Date 1/24/20
Lori Urbanek, PE

CITY OF SANTA ROSA
EMERGENCY WELL 7

ELECTRICAL OVERALL SITE PLAN, E21

CONTRACT NO.
C01965
SHEET 34 OF 42
FILE NO. 2017-0023

EMERGENCY WELL 7

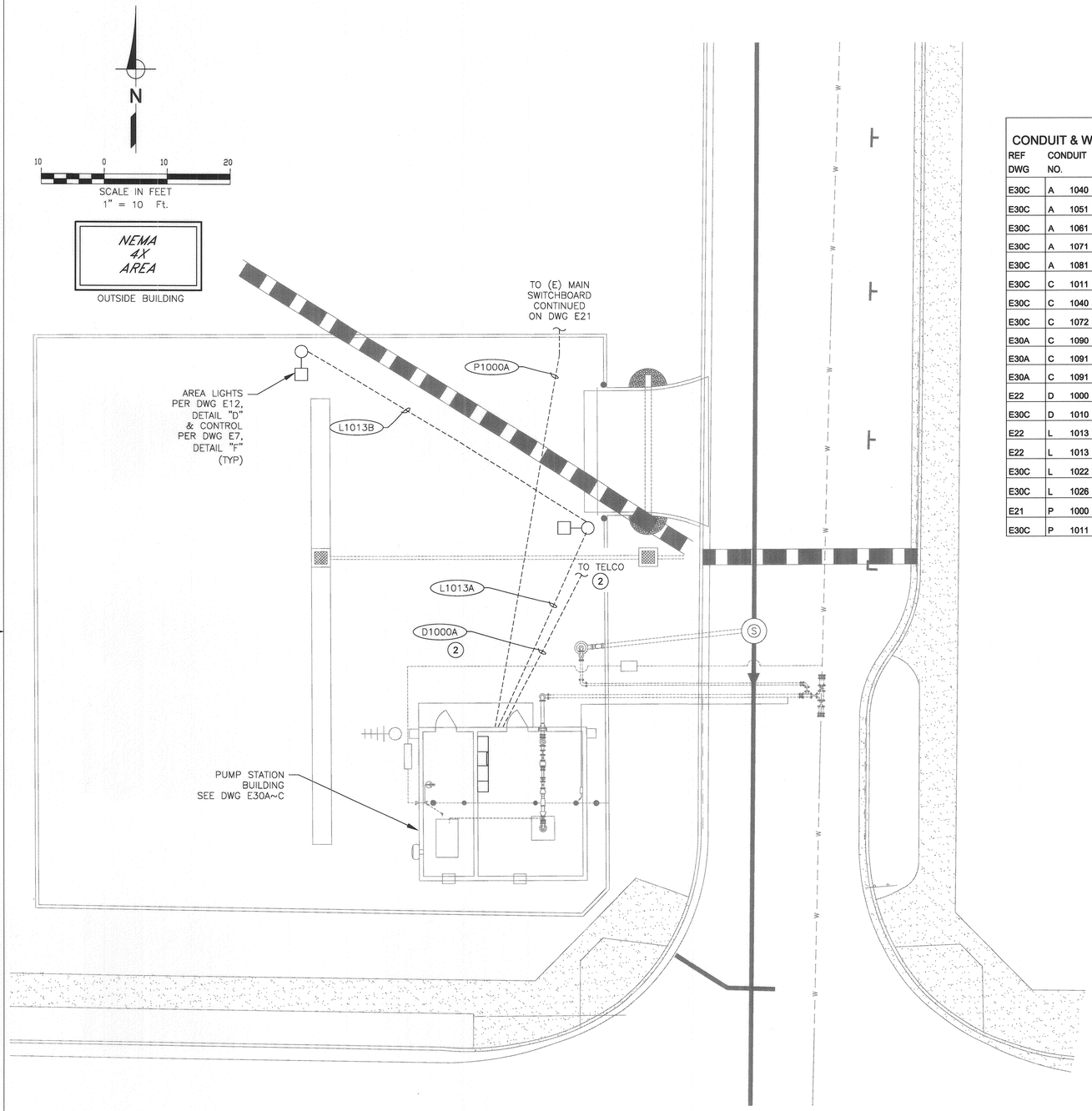

EMERGENCY WELL PUMP STATION SITE PLAN ①

SCALE: 1" = 10'

NOTES: ① HAND DIG TRENCH ROUTE FOR UG CONDUITS IN EXISTING AREA, EXISTING UNDER GROUND SERVICES ARE NOT SHOWN & SHALL BE PROTECTED FROM DAMAGE. INSTALL UG CONDUITS PER DWG E11, DETAIL "B".

② INSTALL TELEPHONE CONDUITS, PULL BOXES PER TELEPHONE COMPANY'S REQUIREMENTS.

CONDUIT & WIRE ROUTING SCHEDULE

REF DWG	CONDUIT NO.	FROM	TO	QTY	SIZE	TYPE	PWR QTY	PWR SIZE	GND SIZE	CONTROL QTY	CONTROL SIZE	SIGNAL QTY	SIGNAL SIZE	NOTES
E30C	A 1040 A	MCC-1	PNL1040	1	1"	GRS-PVC	-	-	#12	-	-	2	#16 TSPR	
E30C	A 1051 A	MCC-1	LT1051	1	1"	GRS-PVC	-	-	-	-	-		MNFR CBL	
E30C	A 1061 A	MCC-1	PIT1061	1	1"	GRS-PVC	2	#14	#12	-	-	1	#16 TSPR	
E30C	A 1071 A	MCC-1	FE1071	1	1"	GRS-PVC	-	-	#8	-	-		MNFR CBL	
E30C	A 1081 A	MCC-1	AIT1081	1	1"	GRS-PVC	-	-	#12	-	-	2	#16 TSPR	
E30C	C 1011 A	MCC-1	PMP1011	1	1"	PVC-40	-	-	#12	6	#14	-	-	
E30C	C 1040 A	MCC-1	PNL1040	1	1"	PVC-40	-	-	#12	10	#14	-	-	
E30C	C 1072 A	MCC-1	FSH1072	1	1"	PVC-40	-	-	#12	4	#14	-	-	
E30A	C 1090 A	MCC-1	PHOTOCELL	1	3/4"	GRS	2	#14	#12	4	#14	-	-	
E30A	C 1091 A	MCC-1	ZS1091A	1	3/4"	GRS	-	-	#12	4	#14	-	-	
E30A	C 1091 B	MCC-1	ZS1091B	1	3/4"	GRS	-	-	#12	4	#14	-	-	
E22	D 1000 A	TELCO	MCC-1	1	2"	PVC-80	-	-	-	-	-	-	-	PULL ROPE
E30C	D 1010 A	MCC-1	ANTENNA	1	2"	GRS-PVC	-	-	#12	-	-	1	1/2" COAX	
E22	L 1013 A	MCC-1	AREA LIGHT	1	1"	PVC-40	4	#10	#10	-	-	-	-	
E22	L 1013 B	AREA LIGHT	AREA LIGHT	1	1"	PVC-40	4	#10	#10	-	-	-	-	
E30C	L 1022 A	MCC-1	AIT1081	1	1"	PVC-40	2	#12	#12	-	-	-	-	
E30C	L 1026 A	MCC-1	PNL1040	1	1"	PVC-40	4	#10	#10	-	-	-	-	
E21	P 1000 A	MS	MCC-1	2	4"	PVC-80	3	#500 kcmil	#1	-	-	-	-	
E30C	P 1011 A	MCC-1	PMP1011	1	3"	PVC-40	1	MNFR CBL	-	-	-	-	-	

T.E.E.m.
(916) 457-8144

© MARCH 2017
ATEEM ENGINEERING
ALL RIGHTS RESERVED

Z:\ACADDWG\2016\1606d\1606de022.dwg 12/20/2019 12:25 PM ATEEM

11/22/2019

REGISTERED PROFESSIONAL ENGINEER
SHARON M. KIMMEL
NO. 15698
Exp.6-30-2020
ELECTRICAL
STATE OF CALIFORNIA

City of Santa Rosa
Transportation & Public Works

NO.	DATE	REVISION	BY

SCALE: AS SHOWN
DATE: NOVEMBER 2019
DWN BY: ZKV
CHK BY: SMK
APPROVED: Deputy Director - Engineering
By Lori Urbanek, PE
Date 1/24/20

CITY OF SANTA ROSA
EMERGENCY WELL 7

EMERGENCY WELL PUMP STATION SITE PLAN, E22

CONTRACT NO. C01965
SHEET 35 OF 42
FILE NO. 2017-0023

EMERGENCY WELL 7

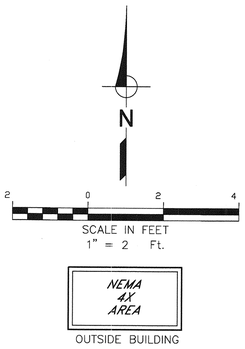

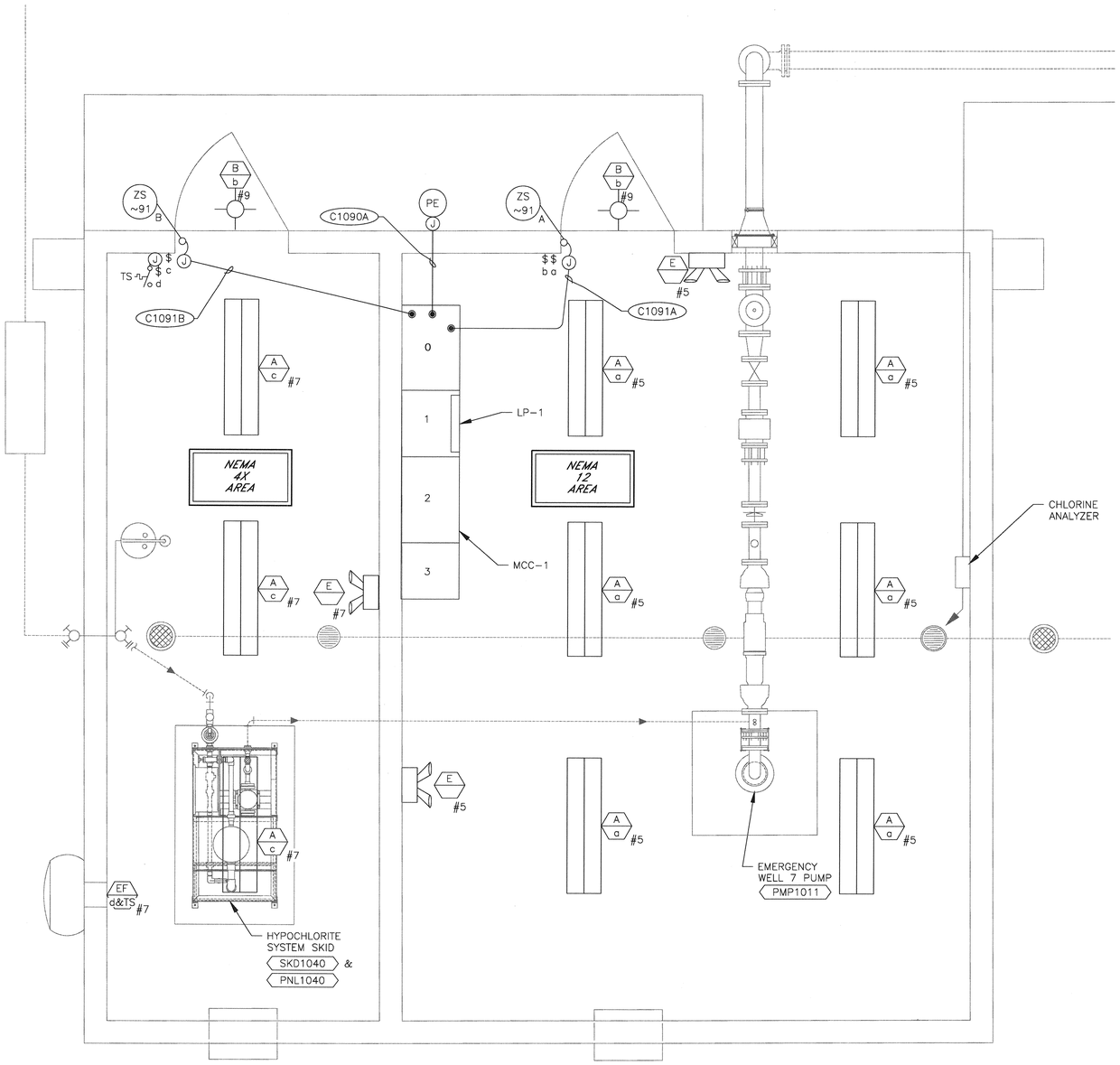

PUMP STATION BUILDING ELECTRICAL REFLECTIVE PLAN (1)

SCALE: 1" = 2'

NOTES: (1) SEE DWG E20 FOR CONDUIT & WIRE INSTALLATION REQUIREMENTS & FIXTURE SCHEDULE. CIRCUITS SHOWN ARE FED FROM LP-1.

AREA PREFIX 10~

REGISTERED PROFESSIONAL ENGINEER — STEVEN M. KIRK — NO. 13698 — Exp.6-30-2020 — ELECTRICAL — STATE OF CALIFORNIA

11/22/2019

City of Santa Rosa
Transportation & Public Works

NO.	DATE	REVISION	BY

DATE: NOVEMBER 2019
CHK BY: SMK
SCALE: AS SHOWN
DWN BY: ZKV

APPROVED: Deputy Director - Engineering
By _____ Date 1/24/20
Lori Urbanek, PE

CITY OF SANTA ROSA
EMERGENCY WELL 7

PUMP STATION BUILDING ELECTRICAL REFLECTIVE PLAN, E30A

CONTRACT NO. C01965
SHEET 36 OF 42
FILE NO. 2017-0023

EMERGENCY WELL 7

T.E.E.M.
(916) 457-8144

© MARCH 2017
ATEEM ENGINEERING
ALL RIGHTS RESERVED

Z:\ACADDWG\2016\1606d\1606de030a.dwg 12/20/2019 12:29 PM ATEEM

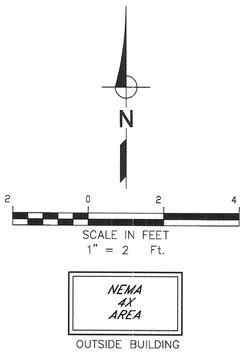

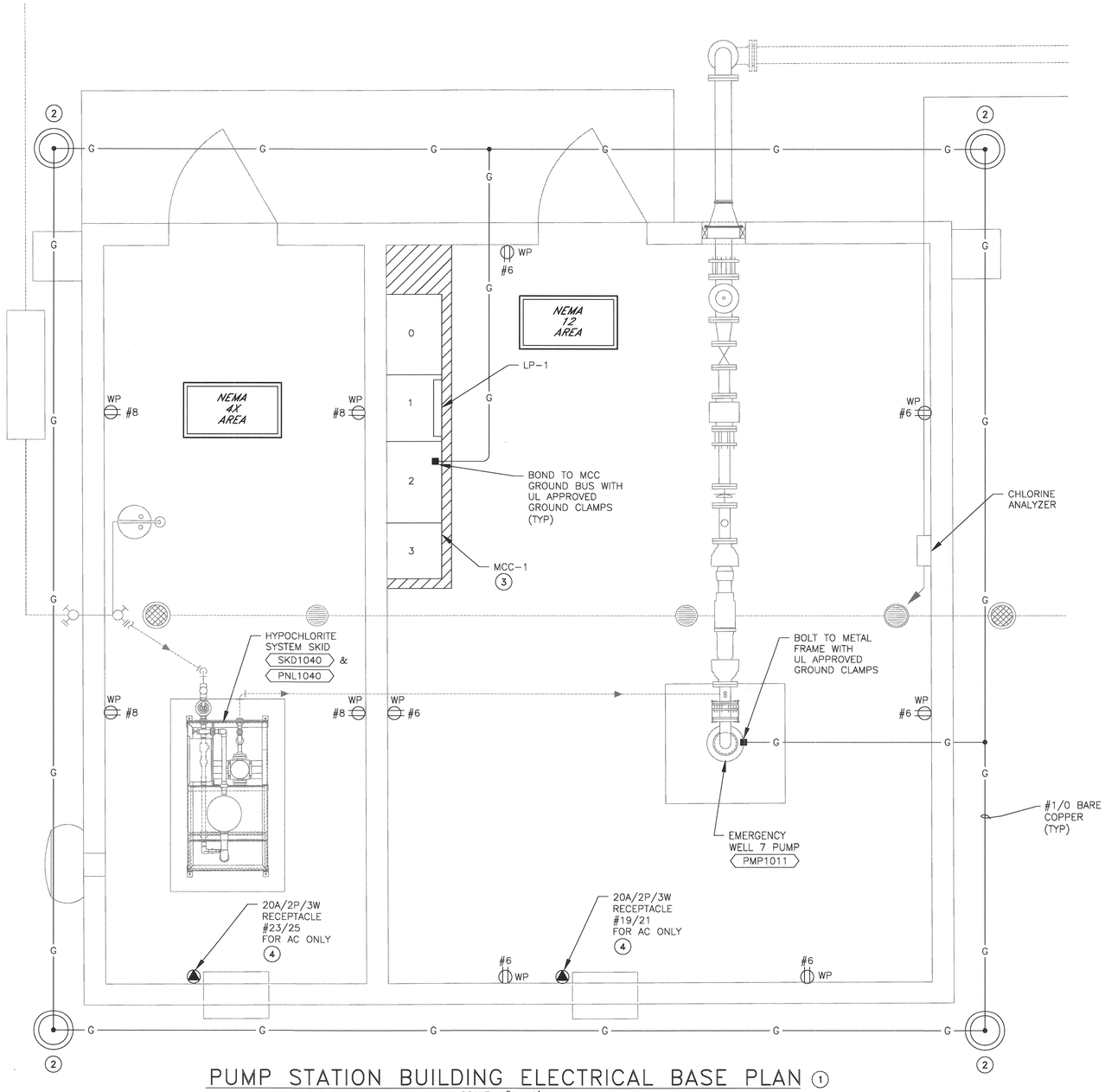

PUMP STATION BUILDING ELECTRICAL BASE PLAN (1)

SCALE: 1" = 2'

NOTES:
1. SEE DWG E20 FOR CONDUIT & WIRE INSTALLATION REQUIREMENTS. CIRCUITS SHOWN ARE FED FROM LP-1.
2. GROUND RING & GROUND BOND TO CONSIST OF #1/0 BARE COPPER WITH 30" MINIMUM COVER. INSTALL GROUND HAND HOLE PER DWG E11, DETAIL "E" & GROUND CABLE CONNECTION PER DWG E11, DETAIL "F".
3. HOUSEKEEPING CONCRETE PAD PER DWG E12, DETAIL "A".
4. MOUNT RECEPTACLE 5' ABOVE FLOOR.

AREA PREFIX 10~

T.E.E.M.
(916) 457-8144

© MARCH 2017
ATEEM ENGINEERING
ALL RIGHTS RESERVED

Z:\ACADDWG\2016\1606d\1606de030b.dwg 11/25/2019 2:36 PM ATEEM

11/22/2019

REGISTERED PROFESSIONAL ENGINEER
STEVEN M. KIMMEL
No. 15698
Exp. 6-30-2020
ELECTRICAL
STATE OF CALIFORNIA

City of Santa Rosa
Transportation & Public Works

NO.	DATE	REVISION	BY

DATE: NOVEMBER 2019
CHK BY: SMK
Date 1/24/20

SCALE: AS SHOWN
DWN BY: ZKV

APPROVED: Deputy Director - Engineering
By Lori Urbanek, PE

CITY OF SANTA ROSA
EMERGENCY WELL 7

PUMP STATION BUILDING ELECTRICAL BASE PLAN, E30B

CONTRACT NO. C01965
SHEET 37 OF 42
FILE NO. 2017-0023

EMERGENCY WELL 7

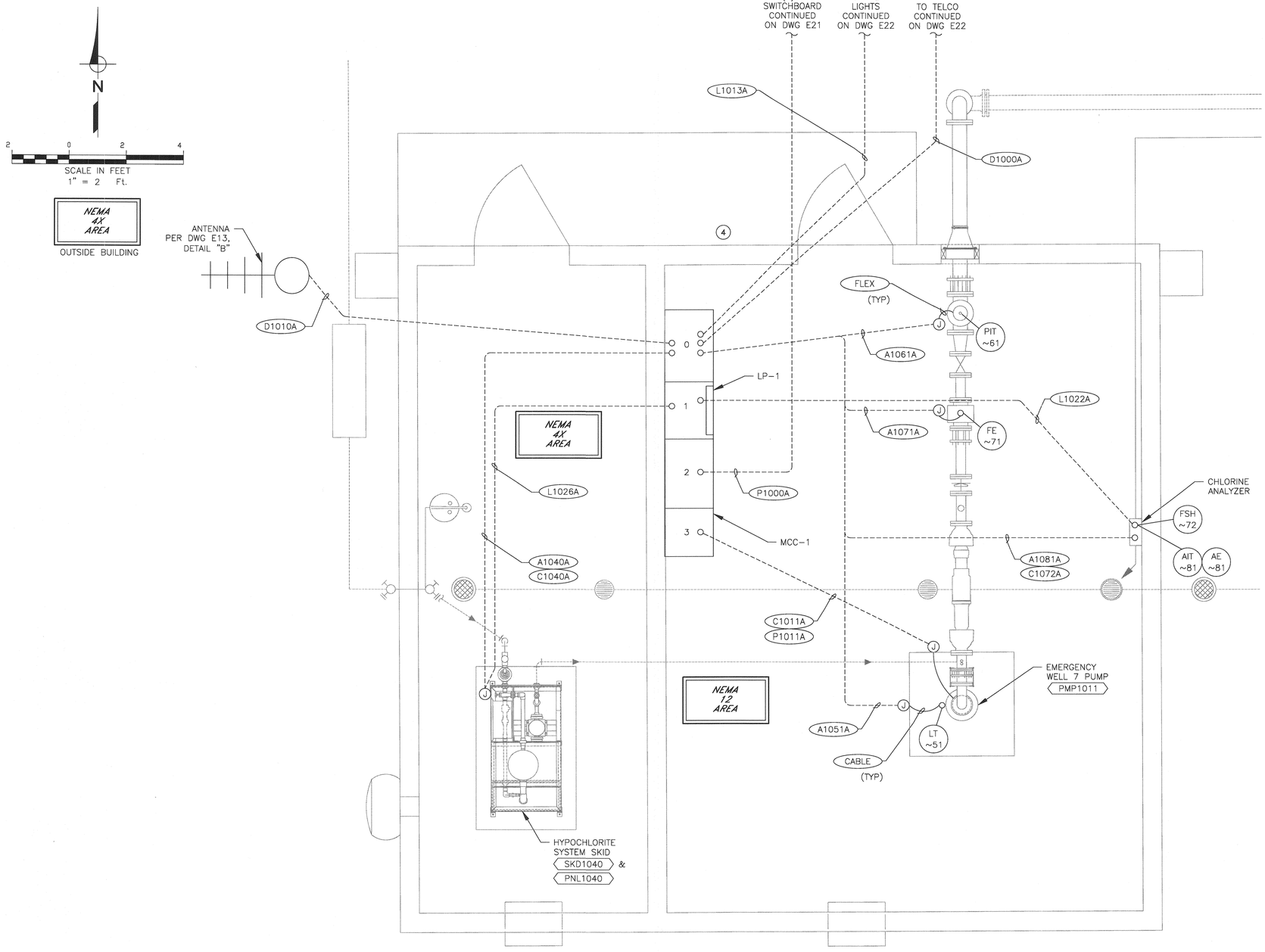

PUMP STATION BUILDING POWER PLAN ①②③

SCALE: 1" = 2'

NOTES:
① UNDERGROUND CONDUITS PER DWG E11, DETAIL "B".
② EXPOSED CONDUIT TRANSITIONS PER DWG E11, DETAIL "G".
③ ALL JUNCTION BOXES SHOWN SHALL BE WEATHERPROOF TYPE.
④ ACCESS PANEL SHALL BE PROVIDED WITH NAMEPLATE "FOR PORTABLE GENERATOR CABLES" PER CITY'S INSTRUCTIONS.

AREA PREFIX 10~

T.E.E.M.
(916) 457-8144

© MARCH 2017
ATEEM ENGINEERING
ALL RIGHTS RESERVED

Z:\ACADDWG\2016\1606d\1606de030C.dwg 12/20/2019 12:52 PM ATEEM

11/22/2019

REGISTERED PROFESSIONAL ENGINEER — SEAN M. KINKEL — NO. 15698 — Exp.6-30-2020 — ELECTRICAL — STATE OF CALIFORNIA

City of Santa Rosa
Transportation & Public Works

NO.	DATE	REVISION	BY

SCALE: AS SHOWN
DWN BY: ZKV
DATE: NOVEMBER 2019
CHK BY: SMK

APPROVED: *Deputy Director – Engineering*
By _____ Date 1/24/20
Lori Urbanek, PE

CITY OF SANTA ROSA
EMERGENCY WELL 7

PUMP STATION BUILDING POWER PLAN, E30C

CONTRACT NO. C01965
SHEET 38 OF 42
FILE NO. 2017-0023

EMERGENCY WELL 7

SYMBOL	DESCRIPTION
P & I DIAGRAM SYMBOLS	
XXX / XXX	FIELD MOUNTED INSTRUMENT
XXX / XXX	FACE MOUNTED INSTRUMENT ON LOCAL PANEL, OPERATOR ACCESSIBLE
XXX / XXX	FACE MOUNTED INSTRUMENT ON FIELD PANEL, OPERATOR ACCESSIBLE
XXX / XXX	INSTRUMENT MOUNTED IN LOCAL PANEL, OPERATOR INACCESSIBLE
XXX / XXX	INSTRUMENT MOUNTED IN FIELD PANEL, OPERATOR INACESSIBLE
I	OPERATION PERFORMED WITH LOGIC OR HARDWIRED DEVICES
DWG #	– REFERENCE ELEMENTARY DWG. #
XXX / XXX	PLC OR COMPUTER FUNCTION PERFORMING OPERATION WITH VISUAL INDICATION
XXX / XXX	PLC OR COMPUTER FUNCTION PERFORMING OPERATION WITH VISUAL ALARM INDICATION
XXX / XXX	PLC OR COMPUTER PERFORMING INTERNAL OPERATION
XXX / XXX	PLC OR COMPUTER PERFORMING INTERNAL ALARM OPERATION
$\propto \int \partial/\partial t$	PROPORTIONAL, INTEGRAL, AND DIFFERENTIAL PARAMETERS
% +/–	RATIO AND BIAS PARAMETERS
	AUDIBLE ALARM (BUZZER OR HORN)
R#–C#	ANNUNCIATOR WINDOW R – ROW # C – COLUMN #
X	LAMP INDICATION (STATUS OR ALARM)
XXXXX	DISCRETE INPUT
	DISCRETE OUTPUT
	ANALOG INPUT
	ANALOG OUTPUT
a XXXX	JUMP TAG FROM ONE AREA TO ANOTHER AREA OF DRAWING "a" TAG CONNECT POINT ON EACH DRAWING
XXXX a	
P–X	CONTINUED ON DWG P–X
P–X	
#	AUTODIALER PRIORITY # PC BASED SOFTWARE

SYMBOL	DESCRIPTION
P & I DIAGRAM SYMBOLS	
OPEN / CLOSED	GATE VALVE
OPEN / CLOSED	PLUG VALVE
OPEN / CLOSED	BALL VALVE
OPEN / CLOSED	BUTTERFLY VALVE
OPEN / CLOSED	GATE (GENERAL)
	CHECK VALVE (GENERAL)
	PRESSURE RELIEF VALVE
	PUMP (GENERAL)
	PROGRESSIVE CAVITY PUMP
	DIAPHRAGM PUMP
	ROTARY SCREW PUMP
	BLOWER (GENERAL)
XXXX	VALVE/GATE NUMBER
XXXXX	EQUIPMENT NUMBER
	ELECTRIC SIGNAL
	LOGIC OR DATA SIGNAL
	PNEUMATIC SIGNAL
	CAPILLARY TUBING (FILLED SYSTEM)
	HYDRAULIC SIGNAL
ES / AS	SONIC OR ELECTROMAGNETIC SIGNAL
E	ELECTRIC SUPPLY
SA	SERVICE AIR
IA	INSTRUMENT AIR
	DISCONNECT SWITCH

INSTRUMENT IDENTIFICATION LETTERS

	FIRST – LETTER	SUCCEEDING – LETTER			
	MEASURED OF INITIATING VARIABLE	MODIFIER	READOUT PASSIVE FUNCTION	OUTPUT FUNCTION	MODIFIER
A	ANALYSIS		ALARM		
B	BURNER, COMBUSTION		USER'S CHOICE	USER'S CHOICE	USER'S CHOICE
C	CONDUCTIVITY			CONTROLLER	
D	DENSITY	DIFFERENTIAL			
E	VOLTAGE		SENSOR, PRIMARY ELEMENT		
F	FLOW RATE	RATIO (FRACTION)			
G	GENERAL		GLASS VIEWING DEVICE		
H	HAND				HIGH, OPENED
I	CURRENT (ELEC.)		INDICATING, INDICATOR		
J	POWER	SCAN			
K	TIME, TIME SCHEDULE	TIME RATE OF CHANGE		CONTROL STATION	
L	LEVEL		LIGHT		LOW, CLOSED
M	MOISTURE	MOMENTARY			MIDDLE
N	STATUS		STATUS	USER'S CHOICE	USER'S CHOICE
O	OPERATOR		ORIFICE, RESTRICTION		
P	PRESSURE, VACUUM		POINT (TEST) CONNECTION		
Q	QUANTITY	INTEGRATE, TOTALIZE			
R	RESET		RECORD		
S	SPEED, FREQUENCY	SAFETY		SWITCH	
T	TEMPERATURE			TRANSMITTER	TEST
U	MULTIVARIABLE		MULTIFUNCTION	MULTIFUNCTION	MULTIFUNCTION
V	VIBRATION, MECH. ANALYSIS			VALVE, DAMPER LOUVER	
W	WEIGHT, FORCE		WELL		
X	SWITCH	X AXIS	UNCLASSIFIED	UNCLASSIFIED	UNCLASSIFIED
Y	EVENT, STATE OR PRESENCE	Y AXIS		RELAY, COMPUTER, CONVERTOR	
Z	POSITION DIMENSION	Z AXIS		DRIVER, ACTUATOR, UNCLASSEIFIED FINAL CONTROL ELEMENT	

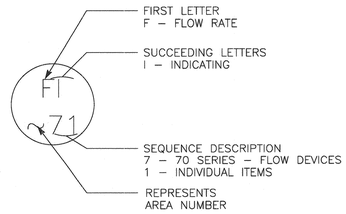

P&ID INSTRUMENT IDENTIFICATION EXAMPLE

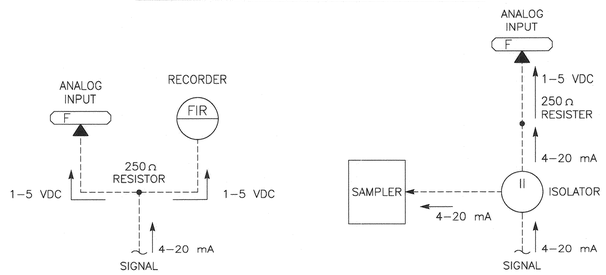

TYPICAL SIGNAL FLOWS

NUMBERING SEQUENCE	
SEQUENCE NUMBER	DESCRIPTION
00	COMMON ALARM
01–09	INDIVIDUAL ITEMS
10	MECHANICAL
20	MECHANICAL
30	MECHANICAL
40	MECHANICAL
50	LEVEL DEVICES
60	PRESSURE DEVICES
70	FLOW DEVICES
80	ANALYTICAL DEVICES
90	SAFETY & SECURITY DEVICES

T.E.E.M.
(916) 457-8144

© MARCH 2017
ATEEM ENGINEERING
ALL RIGHTS RESERVED

Z:\ACADDWG\2016\1606d\1606dI001.dwg 11/25/2019 2:35 PM ATEEM

11/22/2019

REGISTERED PROFESSIONAL ENGINEER — JOHN M. KINNUCAN — NO. 15698 — Exp.6-30-2020 — ELECTRICAL — STATE OF CALIFORNIA

City of Santa Rosa
Transportation & Public Works

NO.	DATE	REVISION	BY

SCALE: AS SHOWN
DWN BY: ZKV
DATE: NOVEMBER 2019
CHK BY: SMK

APPROVED: Deputy Director – Engineering
By _____ Date 1/24/20
Lori Urbanek, PE

CITY OF SANTA ROSA
EMERGENCY WELL 7

INSTRUMENTATION SYMBOLS & ABBREVIATIONS, 11

CONTRACT NO. C01965
SHEET 39 OF 42
FILE NO. 2017–0023

EMERGENCY WELL 7

AUTODIALER

OI DISPLAY

PROGRAMMABLE LOGIC CONTROLLER PLC-1

MOTOR CONTROL CENTER MCC-1

FIELD CONTROL STATION

FIELD

OFF / RUN

UAT ~11

MANUAL / AUTO

MAH ~11

FT LI ~51 LAL ~51 LAH ~51 LO HI

KGAL FI ~71 TOTAL FIQ ~71

PSI PAL ~61 PI ~61 PAH ~61

PPM AAL ~81 AI ~81 AAH ~81

FAH ~72

EMERGENCY WELL 7 PUMP

RUN N1011

CONTROL POWER ON BREAKER ON JN1011A JN1011B

FAIL UST1011

AUTO Y1011

STT/STP X1011

MOISTURE MSH1011

EMERGENCY WELL 7 LEVEL L1051

EMERGENCY WELL 7 FLOW F1071

EMERGENCY WELL 7 PRESSURE P1061

EMERGENCY WELL 7 CL2 RESIDUAL A1081

EMERGENCY WELL 7 HI ANALYZER FLOW FSH1072

RUN G

ETM

ON/OFF NIR ~11 CH4

PUMP REQUIRED A

FAIL R

IN AUTO B

HOA HS ~11 A

HUMAN INTERFACE MODULE HIM

SSS DWG E5

OVERTEMP I 1

FIT ~71 GPM → FIR ~71 KGAL CH2

PIR ~61 PSI CH1 2

AIR ~81 PPM CH3

I3 CHEM INJ SYSTEM

CL INJECTION POINT

ARV

4" FE ~71 MAG FME1071

ARV PIT ~61 PSI PI ~61 PSI CAL PORT

AIT ~81 PPM AE ~81 FSH ~72

TO WATER DISTRIBUTION SYSTEM

PUMP TO WASTE

SEWER DRAIN

MSH ~11

TSH ~11

LT ~51

M

EMERGENCY WELL 7 PUMP PMP1011

EMERGENCY WELL 7

NOTES:
1. MOISTURE/OVERTEMP RELAY SUPPLIED BY PUMP SUPPLIER AND INSTALLED BY MCC SYSTEM SUPPLIER.
2. TYPICAL FOR CHART RECORDER CHANNEL.
3. STATION AREA PREFIX PER OWNER'S INSTRUCTION.

STATION AREA PREFIX
3 10~

T.E.E.M.
(916) 457-8144

© MARCH 2017
ATEEM ENGINEERING
ALL RIGHTS RESERVED

Z:\ACADDWG\2016\1606d\1606dI002.dwg 11/25/2019 2:44 PM ATEEM

REGISTERED PROFESSIONAL ENGINEER
JOHN M. KIMMEY
NO. 15698
Exp.6-30-2020
ELECTRICAL
STATE OF CALIFORNIA

11/22/2019

City of Santa Rosa
Transportation & Public Works

NO.	DATE	REVISION	BY

SCALE: AS SHOWN
DWN BY: ZKV
DATE: NOVEMBER 2019
CHK BY: SMK

APPROVED: Deputy Director - Engineering
By Lori Urbanek, PE Date 12/4/20

CITY OF SANTA ROSA
EMERGENCY WELL 7

EMERGENCY WELL 7 P&ID, I2

CONTRACT NO. C01965
SHEET 40 OF 42
FILE NO. 2017-0023

EMERGENCY WELL 7

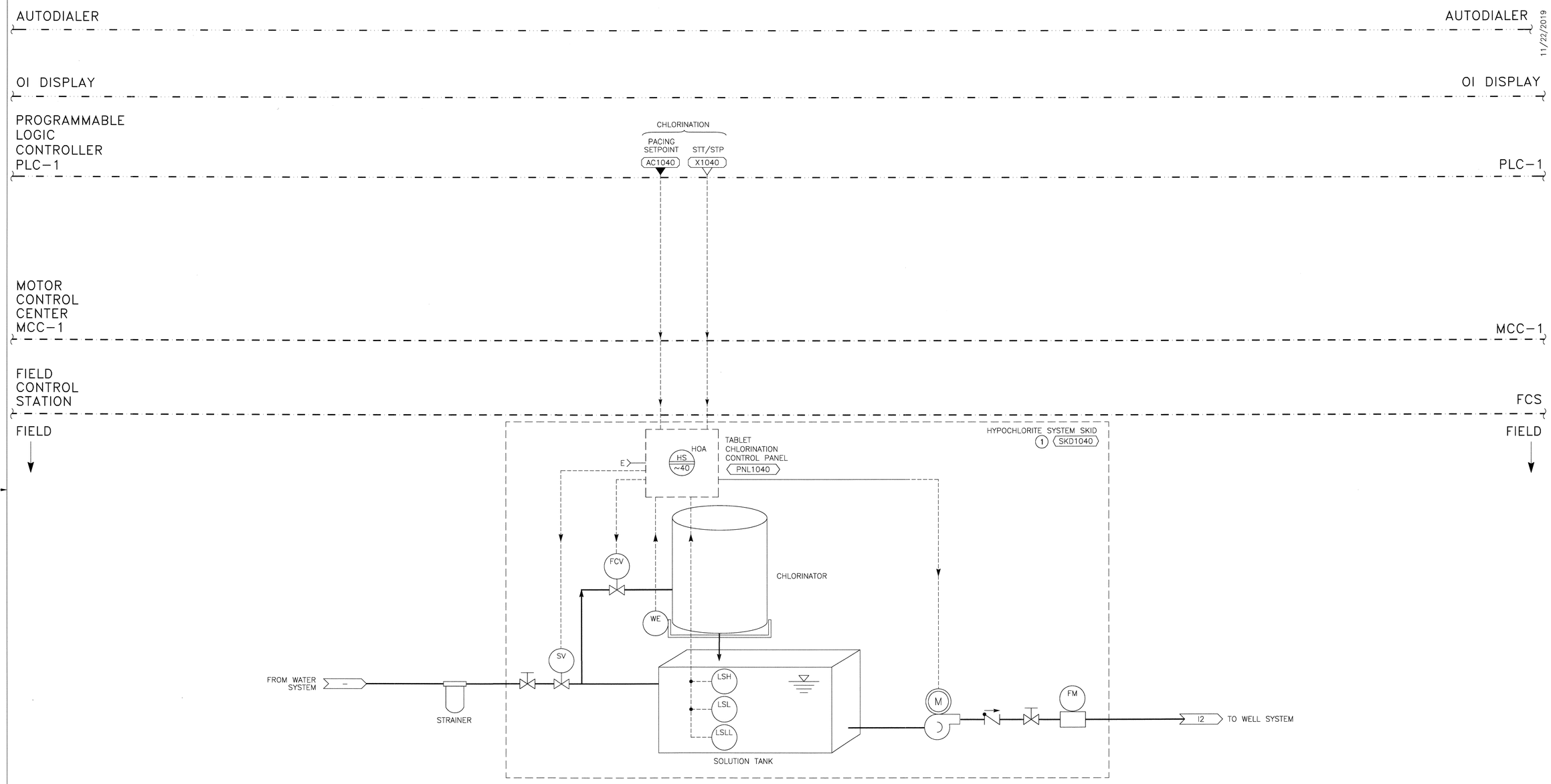

HYPOCHLORITE SYSTEM

NOTES:

1. ALL FIELD DEVICES CONNECTED TO PANEL ARE TO BE PROVIDED WITH UNIT AND PREWIRED ON PACKAGE UNIT.
2. STATION AREA PREFIX PER OWNER'S INSTRUCTION.

STATION AREA PREFIX
2 10~

T.E.E.M.
(916) 457-8144

© MARCH 2017
ATEEM ENGINEERING
ALL RIGHTS RESERVED

Z:\ACADDWG\2016\1606d\1606dl003.dwg 11/25/2019 2:44 PM ATEEM

11/22/2019

REGISTERED PROFESSIONAL ENGINEER
JOHN M. KIMMEY
NO. 15698
Exp.6-30-2020
ELECTRICAL
STATE OF CALIFORNIA

City of Santa Rosa
Transportation & Public Works

NO.	DATE	REVISION	BY

SCALE: AS SHOWN
DWN BY: ZKV
DATE: NOVEMBER 2019
CHK BY: SMK
APPROVED: Deputy Director – Engineering
By Lori Urbanek, PE Date 1/24/20

CITY OF SANTA ROSA
EMERGENCY WELL 7

HYPOCHLORITE SYSTEM P&ID, I3

CONTRACT NO. C01965
SHEET 41 OF 42
FILE NO. 2017-0023

EMERGENCY WELL 7

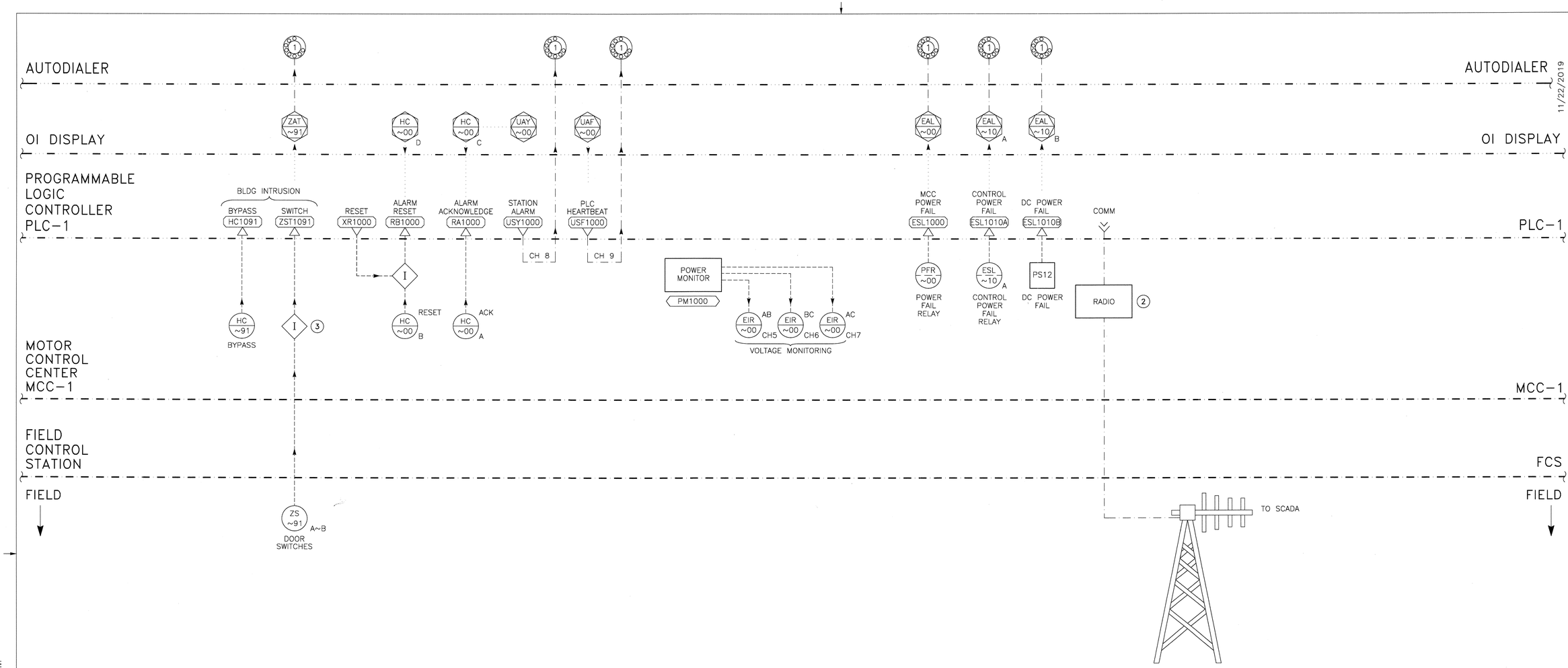

AUXILIARY SYSTEMS 1

NOTES:
1. CONTRACTOR TO MAKE NEEDED UPDATES TO CITY SCADA SYSTEM AS REQUIRED.
2. SEE SPEC SECTION 201 FOR RADIO REQUIREMENTS.
3. WIRE INTRUSION SWITCHES IN SERIES ON TERMINAL BLOCKS IN CONTROL PANEL.
4. STATION AREA PREFIX PER OWNER'S INSTRUCTION.

AREA PREFIX
4 10~

T.E.E.M.
(916) 457-8144

© MARCH 2017
ATEEM ENGINEERING
ALL RIGHTS RESERVED

Z:\ACADDWG\2016\1606d\1606dl004.dwg 11/25/2019 2:45 PM ATEEM

11/22/2019

REGISTERED PROFESSIONAL ENGINEER
JOHN M. KIMMINAU
NO. 15698
Exp.6-30-2020
ELECTRICAL
STATE OF CALIFORNIA

City of Santa Rosa
Transportation & Public Works

NO.	DATE	REVISION	BY

SCALE: AS SHOWN
DATE: NOVEMBER 2019
DWN BY: ZKV
CHK BY: SMK

APPROVED: Deputy Director – Engineering
By [signature] Date 1/24/20
Lori Urbanek, PE

CITY OF SANTA ROSA
EMERGENCY WELL 7

AUXILIARY SYSTEMS P&ID, I4

CONTRACT NO. C01965
SHEET 42 OF 42
FILE NO. 2017-0023

EMERGENCY WELL 7