CITY OF SANTA ROSA

IMPROVEMENT PLANS FOR

Laguna Treatment Plant
Primary Influent Pump Drive Replacement

CONTRACT No. C02051

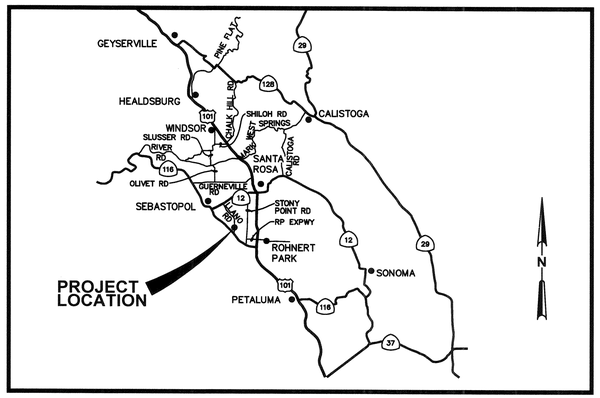

VICINITY MAP

NOT TO SCALE

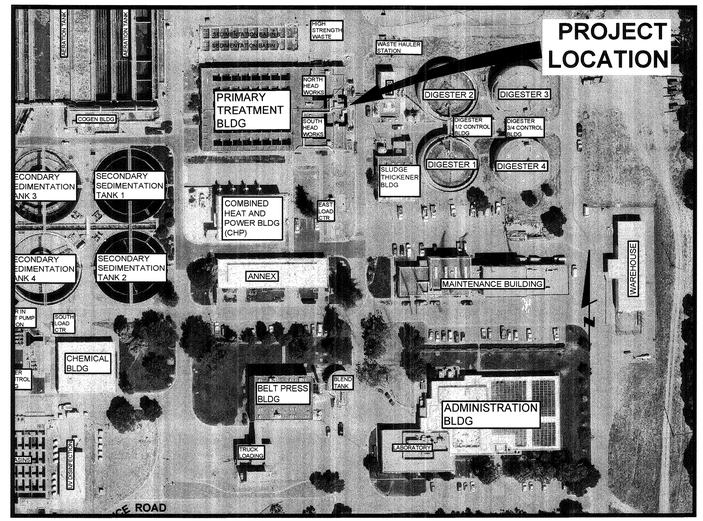

LOCATION MAP

NOT TO SCALE

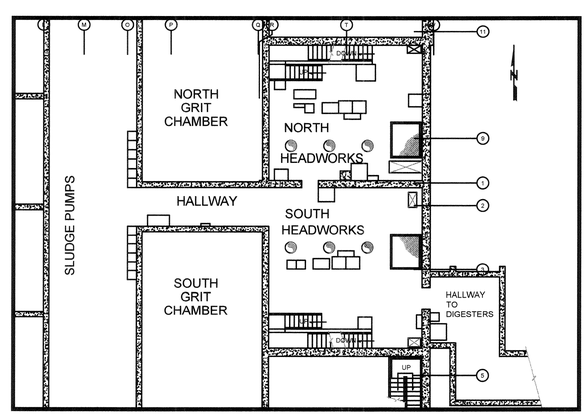

HEADWORKS LOCATION MAP

FLOOR ELEVATION 74.25

DRAWING INDEX

SHEET NO.	DRAWING NO.	SHEET TITLE
1.	G1	COVER SHEET
2.	E-001	LEGENDS, ABBREVIATIONS & DETAILS
3.	E-201	SOUTH HEADWORKS ELECTRICAL PLAN
4.	E-202	NORTH HEADWORKS ELECTRICAL PLAN
5.	E-301	SOUTH HEADWORKS ELEVATIONS
6.	E-302	NORTH HEADWORKS ELEVATIONS
7.	E-501	ELECTRICAL DETAILS
8.	E-601	SINGLE LINE DIAGRAM
9.	E-602	CONTROL DIAGRAM

GENERAL NOTES:

1. ALL WORKMANSHIP, MATERIALS AND CONSTRUCTION SHALL CONFORM TO THE CITY OF SANTA ROSA STANDARD PLANS, THE CONSTRUCTION SPECIFICATIONS FOR PUBLIC IMPROVEMENTS, THE SPECIAL PROVISIONS FOR THIS PROJECT AND THE STATE STANDARD SPECIFICATIONS AND STANDARD PLANS. THE CONTRACTOR IS RESPONSIBLE FOR UNDERSTANDING ALL STANDARDS PERTAINING TO THIS PROJECT.
2. SCHEDULE WORK TO ACCOMMODATE SEASONAL OPERATION REQUIREMENTS. BOTH THE NORTH AND SOUTH HEADWORKS (ALL 6 VFDS AND ASSOCIATED PUMPS) MUST BE AVAILABLE TO RUN BETWEEN OCTOBER 15 AND MAY 15. OUTSIDE OF THIS PERIOD, ONLY 3 VFDS AND ASSOCIATED PUMPS MAY BE TAKEN OUT OF SERVICE AT ANY ONE TIME.
3. WHEN THE FIRST 3 PUMPS ARE TAKEN OUT OF SERVICE, REMOVE VFDS AND ALLOW CITY TO SALVAGE ANY DESIRED COMPONENTS. DISPOSE OF ANY REMAINING MATERIALS. WHEN SECOND 3 PUMPS ARE TAKEN OUT OF SERVICE, DISPOSE OF ALL THREE DRIVES IN THAT PUMP STATION AND ANY REMAINING VFD COMPONENTS SALVAGED FROM THE FIRST PUMP STATION.
4. COORDINATE ALL PLANT UTILITY OR EQUIPMENT OUTAGES WITH PLANT OPERATIONS STAFF AT LEAST ONE WEEK IN ADVANCE.
5. DO NOT ENERGIZE, DE-ENERGIZE, OR REMOVE FROM SERVICE ANY PLANT PROCESS EQUIPMENT UNLESS IN THE PRESENCE OF, AND WITH THE EXPLICIT APPROVAL OF, PLANT OPERATIONS OR MAINTENANCE STAFF.

RECORD PLAN DATA

PROJECT START:
PROJECT END:
GEN. CONTRACTOR:
SUPERINTENDENT:
UNDERGROUND CONTRACTOR:
FOREMAN:
SEWER PIPE TYPE:
MANUFACTURER:
SEWER FITTINGS MANUFACTURER:
M.H. MANUFACTURER:
WATER PIPE TYPE:
MANUFACTURER:
WATER VALVE MANUFACTURER:
WATER FITTINGS MANUFACTURER:
WATER SERVICE TYPE:
MANUFACTURER:
FIRE HYDRANT TYPE:
MANUFACTURER:
INSPECTOR:
CONSTRUCTION MANAGER:
RECORD PLANS BY:
ADDITIONAL INFO:

GHD Inc.
2235 Mercury Way, Suite 150
Santa Rosa, California 95407 USA
T 1 707 523 1010 F 1 707 527 8679
W www.ghd.com

REGISTERED PROFESSIONAL ENGINEER No. E15580 Exp. 12/31/19 ELECTRICAL STATE OF CALIFORNIA

No.	Date	Revision	By	Dept.	Signature	Date
				Design/Construction Subregional Operations		1-29-19

SCALE: AS SHOWN
DATE: JAN 24, 2019
DWN BY: JJVL
CHK BY: RPG
APPROVED: Deputy Director – Engineering
By Lori Urbanek Date 2/4/19

City of Santa Rosa

LAGUNA TREATMENT PLANT PRIMARY INFLUENT PUMP DRIVE REPLACEMENT

COVER SHEET

CONTRACT NO. C02051
DRAWING NO. G–001
SHEET 1 OF 9
FILE NO. 2018–0044

LAGUNA TREATMENT PLANT PRIMARY INFLUENT PUMP DRIVE REPLACEMENT

ABBREVIATIONS

(D)	DEMOLISH
(E)	EXISTING
(F)	FUTURE
(N)	NEW
A	AMPERES
AC	ALTERNATING CURRENT
AF	AMP FRAME
AFF	ABOVE FINISHED FLOOR
AFG	ABOVE FINISHED GRADE
AHU	AIR HANDLING UNIT
AIC	AMPS INTERRUPTING CAPACITY
ANN	ANNUNCIATOR
ATS	AUTOMATIC TRANSFER SWITCH
AWG	AMERICAN WIRE GAUGE
BAT	BATTERY
BFG	BELOW FINISH GRADE
CATV	CABLE TELEVISION
C	CONDUIT
CB	CIRCUIT BREAKER
CCTV	CLOSED CIRCUIT TELEVISION
CO	CONDUIT ONLY
CPT	CONTROL POWER TRANSFORMER
CT	CURRENT TRANSFORMER
CU	COPPER
DC	DIRECT CURRENT
EF	EXHAUST FAN
EGU	ENGINE GENERATOR UNIT
EM	EMERGENCY
EMT	ELECTRICAL METALLIC TUBING
ENT	ELECTRICAL NON-METALLIC TUBING
EP	EXPLOSION PROOF
FA	FIRE ALARM
FACP	FIRE ALARM CONTROL PANEL
FC	FOOT CANDLE
FU	FUSE
GND	GROUND
GFCI	GROUND FAULT CIRCUIT INTERRUPTER
GFI	GROUND FAULT INTERRUPTER
GFR	GROUND FAULT RELAY
HID	HIGH INTENSITY DISCHARGE
HOA	"HAND-OFF-AUTO" SWITCH
HP	HORSEPOWER
HPS	HIGH PRESSURE SODIUM
HVAC	HEATING, VENTILATION & AIR-CONDITIONING
IG	ISOLATED GROUND
JB	JUNCTION BOX
KAIC	KILO-AMPS INTERRUPTING CAPACITY
KV	KILOVOLT
KVA	KILOVOLT-AMP
KW	KILOWATT
KWH	KILOWATT-HOUR
LPS	LOW PRESSURE SODIUM
LV	LOW VOLTAGE
MCB	MAIN CIRCUIT BREAKER
MCC	MOTOR CONTROL CENTER
MCP	MOTOR CIRCUIT PROTECTOR
MFR	MANUFACTURER
MH	METAL HALIDE
MLO	MAIN LUGS ONLY
MV	MEDIUM VOLTAGE
NIC	NOT IN CONTRACT
NL	NIGHT LIGHT
NTS	NOT TO SCALE
OC	ON CENTER
PA	PUBLIC ADDRESS
PLC	PROGRAMMABLE LOGIC CONTROLLER
PT	POTENTIAL TRANSFORMER
PVC	POLYVINYL CHLORIDE
PB	PULL BOX, ELECTRICAL
RECPT	RECEPTACLE, OUTLET
RGS	RIGID GALVANIZED STEEL (CONDUIT)
RVSS	REDUCED VOLTAGE SOFT START
RTU	REMOTE TERMINAL UNIT
TV	TELEVISION MONITOR (SET)
TVSS	TRANS. VOLT. SURGE SUPPRESSOR
UF	UNDER FLOOR
UG	UNDERGROUND
UON	UNLESS OTHERWISE NOTED
UPS	UNINTERRUPTIBLE POWER SUPPLY
V	VOLT
VA	VOLT-AMP
VFD	VARIABLE FREQUENCY DRIVE
WP	WEATHERPROOF
WPI	WEATHERPROOF IN USE
XFMR	TRANSFORMER

ELECTRICAL SYMBOLS LEGEND

SCHEMATIC

- BATTERY CHARGER
- COIL RELAY
- CONTACT - NORMALLY CLOSED
- CONTACT - NORMALLY OPEN
- DC BATTERY
- ETM — ELAPSED TIME METER
- FLOAT OR LEVEL SWITCH - NORMALLY CLOSED
- FLOAT OR LEVEL SWITCH - NORMALLY OPEN
- LIMIT SWITCH - NORMALLY CLOSED
- LIMIT SWITCH, NORMALLY OPEN
- PILOT LIGHT, LED TYPE - COLOR AS INDICATED
- PILOT LIGHT, PUSH-TO-TEST
- PRESSURE SWITCH - CLOSED ON INCREASE
- PRESSURE SWITCH - OPEN ON INCREASE
- PUSH BUTTON, MOMENTARY - NORMALLY CLOSED
- PUSH BUTTON, MOMENTARY - NORMALLY OPEN
- RECTIFIER
- O / H A — SELECTOR SWITCH - HAND-OFF-AUTO
- SWITCH - NORMALLY CLOSED
- SWITCH - NORMALLY OPEN
- TEMPERATURE SWITCH - NORMALLY CLOSED
- TEMPERATURE SWITCH - NORMALLY OPEN
- TIMER SWITCH - NORMALLY CLOSED
- TIMER SWITCH - NORMALLY OPEN

DIAGRAM

- ALARM, INDICATING LIGHT, SIGNAL LIGHT OR STROBE
- AT / AF — CIRCUIT BREAKER - SIZE AND TYPE AS INDICATED
- XXX/X NEMA XX — CIRCUIT BREAKER IN NEMA ENCLOSURE SIZE AND TYPE AS INDICATED
- OL — THERMAL OVERLOAD RELAY
- XXX/X / SIZE / OL — COMBINATION MOTOR CONTROLLER, STARTER, CIRCUIT BREAKER TYPE
- SHUNT TRIP
- DRAW-OUT TYPE CONNECTION
- DISCONNECT SWITCH WITH FUSE
- FUSE - SIZE AS INDICATED
- INTERLOCK, ELECTRICAL
- M — METER, ELECTRICAL
- M — MOTOR - SIZE AS INDICATED
- TRANSFER SWITCH, ATS: AUTOMATIC, MTS: MANUAL
- G — GENERATOR UNIT - RATED AS INDICATED
- TRANSFORMER, PAD MOUNT
- TRANSFORMER, DRY TYPE
- POTENTIAL TRANSFORMER WITH FUSE
- CURRENT TRANSFORMER
- SURGE ARRESTOR - LIGHTING
- GROUNDING ELECTRODE OR CONNECTION

POWER

- +48" — DUPLEX RECEPTACLE, 15A 125V 2P 3W, GROUNDING TYPE, MOUNTING HEIGHT: +18" AFF UON
  DENOTES HEIGHT IN INCHES AFF (INTERIOR) AFG (EXTERIOR)
- $ — DUPLEX RECEPTACLE - SPLIT WIRED, SWITCHED
- DUPLEX RECEPTACLE - EMERGENCY POWER
- C — DUPLEX RECEPTACLE - CEILING MOUNTED
- FLOOR RECEPTACLE, 15A 125V 2P 3W, GROUNDING TYPE, FLUSH TYPE UON
- DOUBLE DUPLEX RECEPTACLE, 15A 125V 2P 3W, GROUNDING TYPE, MOUNTING HEIGHT: +18" AFF UON
- SINGLE RECEPTACLE, 20A 125V 2P 3W, GROUNDING TYPE, MOUNTING HEIGHT: +18" AFF UON
- OR — SPECIAL PURPOSE RECEPTACLE AS DESIGNATED SEE 'SPECIAL SYMBOLS' ON EACH SHEET
- DUAL SERVICE RECESSED FLOOR BOX WITH DUPLEX AND DATA RECEPTACLES
- J OR J — JUNCTION BOX, CODE SIZED UON
- FLOOR JUNCTION BOX
- DISCONNECT SWITCH - FUSED WHERE APPLICABLE
- MOTOR STARTER, COMBINATION WITH DISCONNECT SWITCH
- MOTOR STARTER OR CONTROLLER
- MOTOR CONNECTION
- CEILING EXHAUST FAN
- WH OR WH — WATER HEATER
- P — POWER POLE: P=POWER, T=TELEPHONE, D=DATA, C=COMBINATION
- TEST PORT
- OR — GROUND ROD
- GUY WIRE AND ANCHOR
- T — THERMOSTAT (SEE MECHANICAL DRAWINGS) COORDINATE MOUNTING HEIGHT
- BT — BYPASS TIMER OR TIME SWITCH
- PUSHBUTTON
- LC — LIGHTING CONTACTOR

EQUIPMENT

- MAIN SWITCHBOARD
- DISTRIBUTION PANEL BOARD
- COMBINATION METER/MAIN SERVICE PANEL
- OR — BRANCH CIRCUIT PANEL BOARD, SURFACE OR FLUSH MOUNTED
- OR — LIGHTING CONTROL PANEL
- OR — SIGNAL TERMINAL CABINET OR CONTROL PANEL SURFACE OR FLUSH MOUNTED
- SIGNAL TERMINAL BACKBOARD
- N30 — CONCRETE UNDERGROUND HAND HOLE (NUMBER DENOTES CHRISTY SIZE)
- T OR — TRANSFORMER

CONDUIT

- CONDUIT INSTALLED ABOVE GRADE
- CONDUIT INSTALLED UNDERGROUND OR UNDER SLAB
- CONDUIT STUB-OUT WITH CAP
- FLEXIBLE CONDUIT WHIP TO LIGHT FIXTURE OR EQUIPMENT
- CONDUIT HOME RUN TO DESIGNATED PANEL, TERMINAL, OR CONTROL CABINET
  EXAMPLES:
  - L1–4 — INDICATES BRANCH PANEL; INDICATES CIRCUIT BREAKER I.D.
  - L1–6,8 — COMMA INDICATES MULTIPLE SINGLE POLE CIRCUITS
  - L1–10/12 — SLASH INDICATES MULTI–POLE CIRCUIT

NOTE FOR CONDUIT: THE TIC MARKS INDICATE THE QUANTITY OF #12 AWG WIRES OR, IF INDICATED, THE QUANTITY OF OTHER SIZE WIRE OR CABLES.

SEE THE SINGLE LINE DIAGRAM FOR FEEDER SIZES.
EXAMPLES: = (3) #12; = (2) #10 (#10); = (1) TYPE F1 CABLE. SEE CABLE SCHEDULE. (F1)

OBJECT LINES

- NEW OBJECTS (HEAVY CONTINUOUS LINES, UNDERGROUND CONDUIT HEAVY DASHED LINES)
- EXISTING OBJECTS TO REMAIN. MAY INCLUDE NEW CIRCUITING ETC. (FINE CONTINUOUS LINES, UNDERGROUND CONDUIT FINE DASHED LINES)
- EXISTING OBJECTS TO BE DEMOLISHED (EXTRA FINE DASHED LINES, SCREENED)

ANNOTATION

- 1 — KEYNOTE
- 1 — DEMOLITION NOTE
- 10 — RACEWAY, FEEDER OR CIRCUIT DESIGNATION (SEE SCHEDULE)
- A / 180 — LIGHTING FIXTURE TYPE DESIGNATION (SEE SCHEDULE); DENOTES TYPE; DENOTES WATTS
- 1 / E-501 — DETAIL INDICATOR; DETAIL NUMBER; SHEET NUMBER ON WHICH DETAIL APPEARS
- A / E-301 — SECTION INDICATOR; SECTION LETTER; SHEET NUMBER ON WHICH SECTION APPEARS
- WH / 1 — MECHANICAL EQUIPMENT DESIGNATION (SEE SCHEDULE)

REGISTERED PROFESSIONAL ENGINEER — No. E15580 — Exp. 12/31/19 — ELECTRICAL — STATE OF CALIFORNIA

GHD Inc.
2235 Mercury Way, Suite 150
Santa Rosa, California 95407 USA
T 1 707 523 1010 F 1 707 527 8679
W www.ghd.com

No.	Date	Revision	By

DATE: JAN 24, 2019 — CHK BY: RPG
SCALE: NONE — DWN BY: JJVL
APPROVED: Deputy Director – Engineering — Date 2/4/19
By Lori Urbanek

City of Santa Rosa

LAGUNA TREATMENT PLANT
PRIMARY INFLUENT PUMP DRIVE REPLACEMENT

LEGEND, ABBREVIATIONS & DETAILS

CONTRACT NO. C02051
DRAWING NO. E–001
SHEET 2 OF 9
FILE NO. 2018–0044

LAGUNA TREATMENT PLANT PRIMARY INFLUENT PUMP DRIVE REPLACEMENT

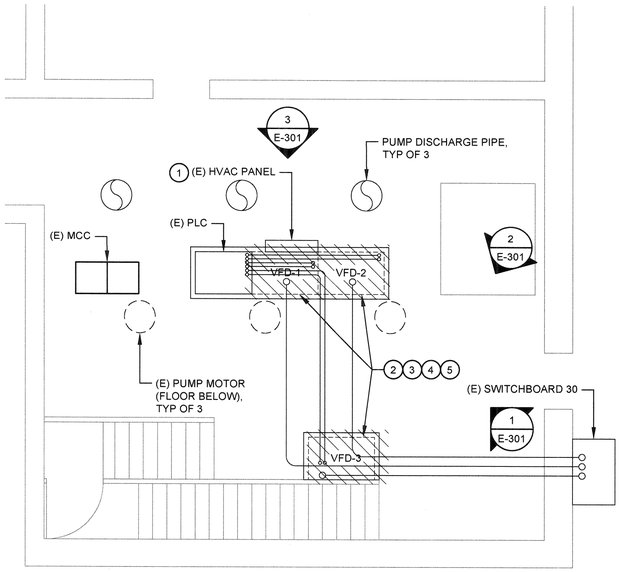

1 SOUTH HEADWORKS ELECTRICAL DEMOLITION PLAN

1/4"=1'-0" 0 2' 4' 8'

N

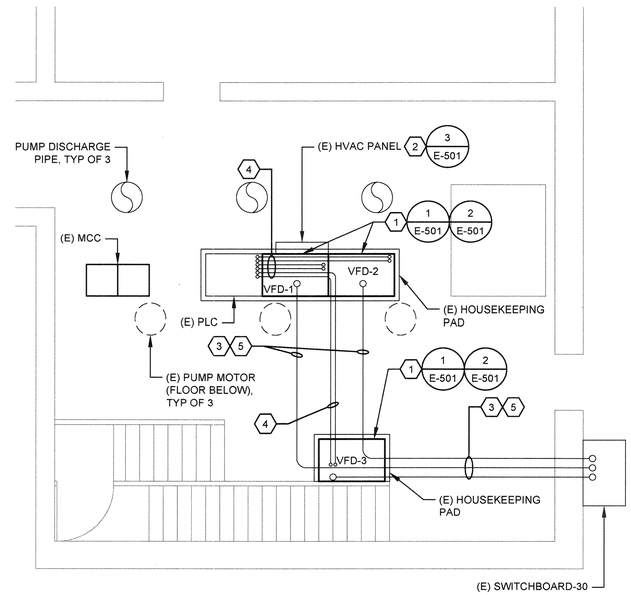

2 SOUTH HEADWORKS ELECTRICAL PLAN

1/4"=1'-0" 0 2' 4' 8'

N

DEMOLITION NOTES

1. UNBOLT (E) HVAC CONTROL PANEL FROM REAR OF VFDS. PROVIDE TEMPORARY SUPPORT FOR HVAC PANEL FOR DURATION OF VFD REPLACEMENT.
2. DISCONNECT MOTOR FEEDER CONDUCTORS AT VFD OUTPUT LUGS AND PROTECT FOR REUSE.
3. DISCONNECT POWER CONDUCTORS BETWEEN SWITCHBOARD 30 AND VFD INPUT BREAKER. REMOVE CONDUCTORS FROM CONDUIT. DISCONNECT CONDUIT FROM VFD ENCLOSURE, AND MOVE CONDUIT TO ALLOW REMOVAL OF VFD ENCLOSURE.
4. DISCONNECT CONTROL CONDUCTORS FROM VFD TERMINAL BLOCK, AND PROTECT CONDUCTORS FOR REUSE. DISCONNECT CONDUIT FROM ENCLOSURE, AND MOVE CONDUIT TO ALLOW REMOVAL OF VFD ENCLOSURE.
5. REMOVE VFD ENCLOSURE AND DISPOSE.

KEYNOTES

1. ADJUST VFD ENCLOSURE POSITION ON PAD TO SUIT EXISTING CONDUIT POSITIONS AND ENCLOSURE CONDUIT ENTRIES.
2. PROVIDE STRUT TO SUPPORT (E) HVAC CONTROL PANEL FROM THE FLOOR.
3. RELOCATE AND EXTEND EXISTING VFD POWER FEEDER CONDUITS AS REQUIRED TO ALIGN WITH VFD CONDUIT ENTRY. PROVIDE NEW FEEDER CONDUCTORS FROM SWBD 30 TO VFD INPUT BREAKER LUGS, PER SINGLE LINE DIAGRAM.
4. RE-ATTACH EXISTING CONTROL CONDUITS TO VFD ENCLOSURE CONDUIT ENTRY LOCATION. PROVIDE CONDUIT NIPPLE AS NECESSARY TO EXTEND CONDUIT FROM EXISTING "LB" FITTING TO TOP OF VFD ENCLOSURE. RECONNECT (E) CONTROL WIRES (12- #14AWG IN 1"C, 2- #16 INSTRUMENTATION CABLES (1 SPARE) IN 1"C) AT VFD TERMINAL BLOCK.
5. RE-ATTACH (E) MOTOR FEEDERS TO VFD OUTPUT LUGS. RE-ATTACH (E) MOTOR HEATER/ MOTOR TEMPERATURE SWITCH CIRCUITS TO VFD CONTROL TERMINAL BLOCK.

REGISTERED PROFESSIONAL ENGINEER
No. E15580
Exp. 12/31/19
ELECTRICAL
STATE OF CALIFORNIA

GHD Inc.
2235 Mercury Way, Suite 150
Santa Rosa, California 95407 USA
T 1 707 523 1010 F 1 707 527 8679
W www.ghd.com

No.	Date	Revision	By

DATE: JAN 24, 2019
CHK BY: RPG
SCALE: AS SHOWN
DWN BY: JJVL
APPROVED: Deputy Director – Engineering
By Lori Urbanek Date 2/4/19

City of Santa Rosa

LAGUNA TREATMENT PLANT
PRIMARY INFLUENT PUMP DRIVE REPLACEMENT

SOUTH HEADWORKS ELECTRICAL PLAN

CONTRACT NO. C02051
DRAWING NO. E-201
SHEET 3 OF 9
FILE NO. 2018-0044

LAGUNA TREATMENT PLANT PRIMARY INFLUENT PUMP DRIVE REPLACEMENT

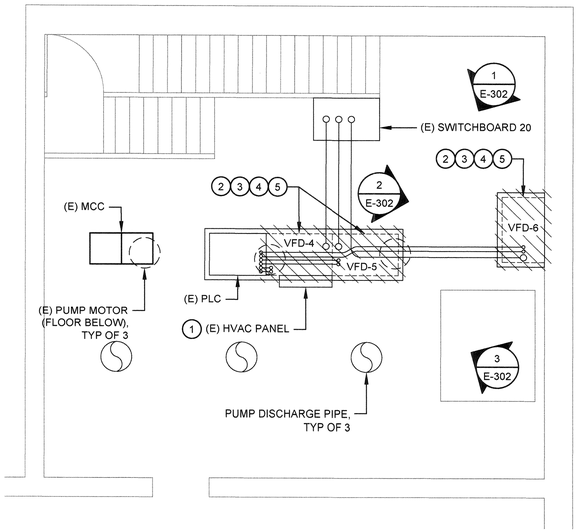

1 NORTH HEADWORKS ELECTRICAL DEMOLITION PLAN

1/4"=1'-0" 0 2' 4' 8'

N

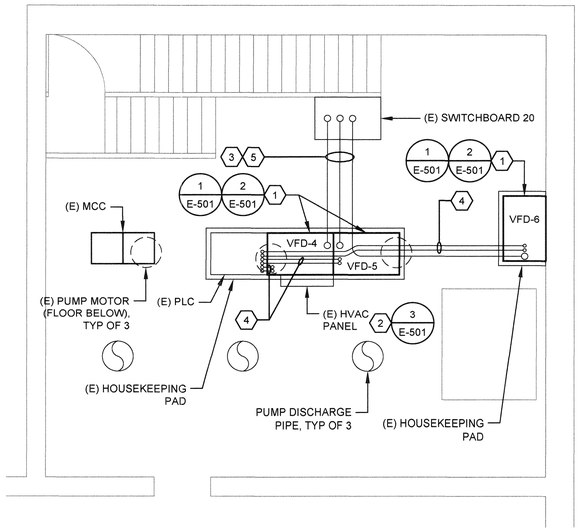

2 NORTH HEADWORKS ELECTRICAL PLAN

1/4"=1'-0" 0 2' 4' 8'

N

DEMOLITION NOTES

1. UNBOLT (E) HVAC CONTROL PANEL FROM REAR OF VFDS. PROVIDE TEMPORARY SUPPORT FOR HVAC PANEL FOR DURATION OF VFD REPLACEMENT.
2. DISCONNECT MOTOR FEEDER CONDUCTORS AT VFD OUTPUT LUGS AND PROTECT FOR REUSE.
3. DISCONNECT POWER CONDUCTORS BETWEEN SWITCHBOARD 20 AND VFD INPUT BREAKER. REMOVE CONDUCTORS FROM CONDUIT. DISCONNECT CONDUIT FROM VFD ENCLOSURE, AND MOVE CONDUIT TO ALLOW REMOVAL OF VFD ENCLOSURE.
4. DISCONNECT CONTROL CONDUCTORS FROM VFD TERMINAL BLOCK, AND PROTECT CONDUCTORS FOR REUSE. DISCONNECT CONDUIT FROM ENCLOSURE, AND MOVE CONDUIT TO ALLOW REMOVAL OF VFD ENCLOSURE.
5. REMOVE VFD ENCLOSURE AND DISPOSE.

KEYNOTES

1. ADJUST VFD ENCLOSURE POSITION ON PAD TO SUIT EXISTING CONDUIT POSITIONS AND ENCLOSURE CONDUIT ENTRIES.
2. PROVIDE STRUT TO SUPPORT (E) HVAC CONTROL PANEL FROM THE FLOOR.
3. RELOCATE AND EXTEND EXISTING VFD POWER FEEDER CONDUITS AS REQUIRED TO ALIGN WITH VFD CONDUIT ENTRY. PROVIDE NEW FEEDER CONDUCTORS FROM SWBD 20] TO VFD INPUT BREAKER LUGS, PER SINGLE LINE DIAGRAM.
4. RE-ATTACH EXISTING CONTROL CONDUITS TO VFD ENCLOSURE CONDUIT ENTRY LOCATION. PROVIDE CONDUIT NIPPLE AS NECESSARY TO EXTEND CONDUIT FROM EXISTING "LB" FITTING TO TOP OF VFD ENCLOSURE. RECONNECT (E) CONTROL WIRES (12- #14AWG IN 1"C, 2- #16 INSTRUMENTATION CABLES (1 SPARE) IN 1"C) AT VFD TERMINAL BLOCK.
5. RE-ATTACH (E) MOTOR FEEDERS TO VFD OUTPUT LUGS. RE-ATTACH (E) MOTOR HEATER/ MOTOR TEMPERATURE SWITCH CIRCUITS TO VFD CONTROL TERMINAL BLOCK.

REGISTERED PROFESSIONAL ENGINEER
No. E15580
Exp. 12/31/19
ELECTRICAL
STATE OF CALIFORNIA

GHD Inc.
2235 Mercury Way, Suite 150
Santa Rosa, California 95407 USA
T 1 707 523 1010 F 1 707 527 8679
W www.ghd.com

No.	Date	Revision	By

SCALE: AS SHOWN
DATE: JAN 24, 2019
DWN BY: JJVL
CHK BY: RPG
APPROVED: Deputy Director – Engineering
By Lori Urbanek Date 2/4/19
Lori Urbanek

City of Santa Rosa

LAGUNA TREATMENT PLANT PRIMARY INFLUENT PUMP DRIVE REPLACEMENT

NORTH HEADWORKS ELECTRICAL PLANS

CONTRACT NO. C02051
DRAWING NO. E-202
SHEET 4 OF 9
FILE NO. 2018-0044

LAGUNA TREATMENT PLANT PRIMARY INFLUENT PUMP DRIVE REPLACEMENT

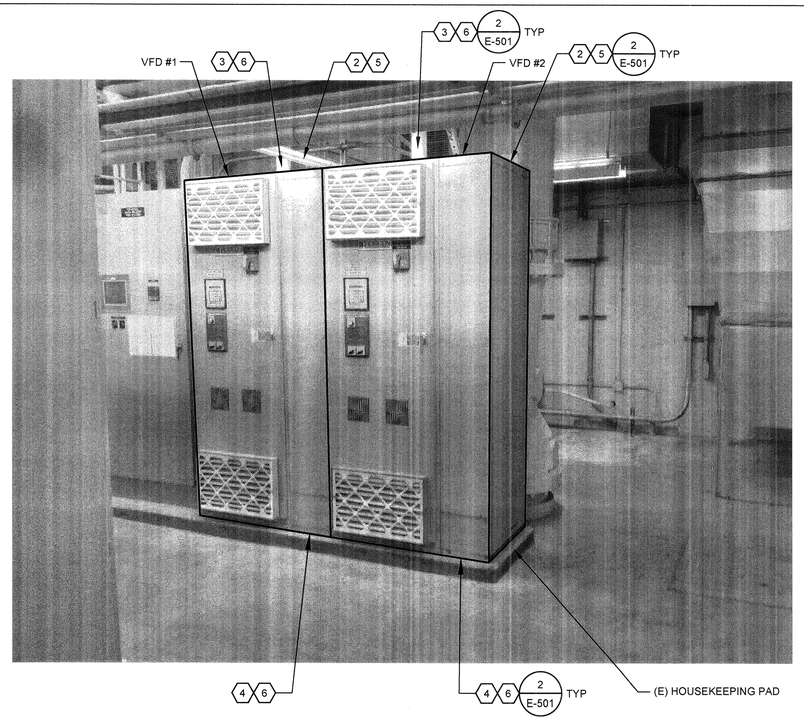

1 **VFD #1 AND #2**

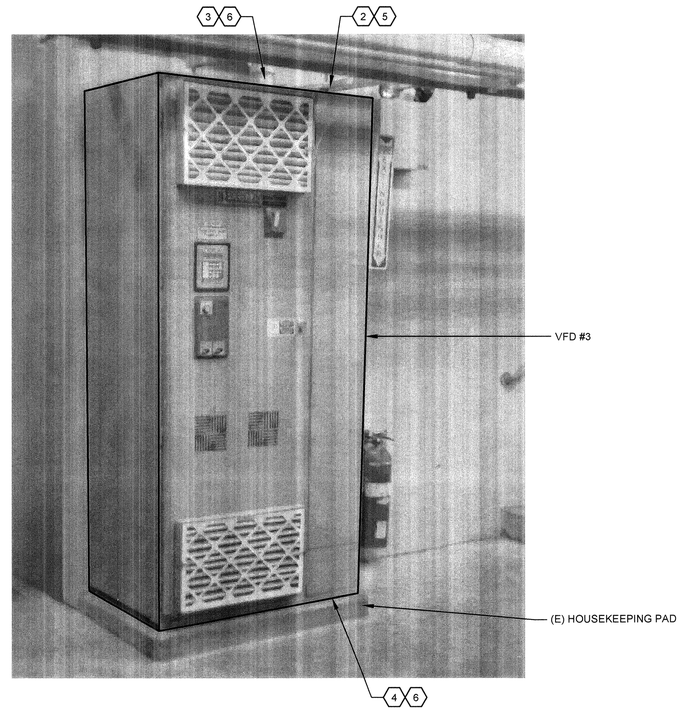

2 **VFD #3**

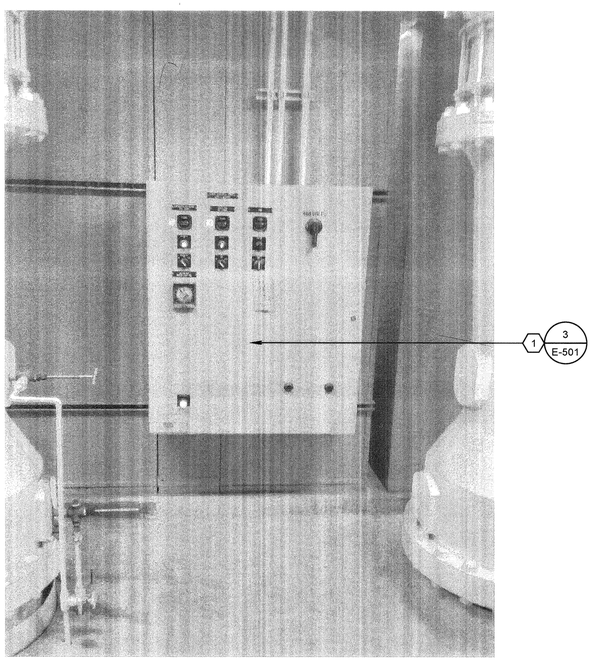

3 **HVAC PANEL**

KEYNOTES

1. UNBOLT (E) HVAC CONTROL PANEL FROM REAR OF VFDS. PROVIDE STRUT TO SUPPORT (E) HVAC CONTROL PANEL FROM THE FLOOR PER DETAIL 3 ON DRAWING E-501.
2. DISCONNECT CONTROL CONDUCTORS BETWEEN VFD AND PLC.
3. DISCONNECT POWER CONDUIT FROM VFD ENCLOSURE. PROVIDE NEW FEEDER CONDUCTORS FROM SWBD 30 TO CONNECT TO BREAKER LUGS.
4. DISCONNECT MOTOR FEEDERS FROM VFD OUTPUT LUGS. REMOVE FEEDERS FROM CONDUIT.
5. RECONNECT EXISTING CONTROL WIRES BETWEEN VFD AND PLC. MAKE FINAL WIRING CONNECTION TO PLC AT CITY'S DIRECTION.
6. RECONNECT EXISTING MOTOR FEEDER CONDUCTORS.

REGISTERED PROFESSIONAL ENGINEER
Ramesh J. Patel
No. E15580
Exp. 12/31/19
ELECTRICAL
STATE OF CALIFORNIA

GHD Inc.
2235 Mercury Way, Suite 150
Santa Rosa, California 95407 USA
T 1 707 523 1010 F 1 707 527 8679
W www.ghd.com

No.	Date	Revision	By

SCALE: NONE
DATE: JAN 24, 2019
DWN BY: JJVL
CHK BY: RPG
APPROVED: *Deputy Director – Engineering*
By Lori Urbanek Date 2/4/19

City of Santa Rosa

LAGUNA TREATMENT PLANT
PRIMARY INFLUENT PUMP DRIVE REPLACEMENT

SOUTH HEADWORKS ELEVATIONS

CONTRACT NO. C02051
DRAWING NO. E-301
SHEET 5 OF 9
FILE NO. 2018-0044

LAGUNA TREATMENT PLANT PRIMARY INFLUENT PUMP DRIVE REPLACEMENT

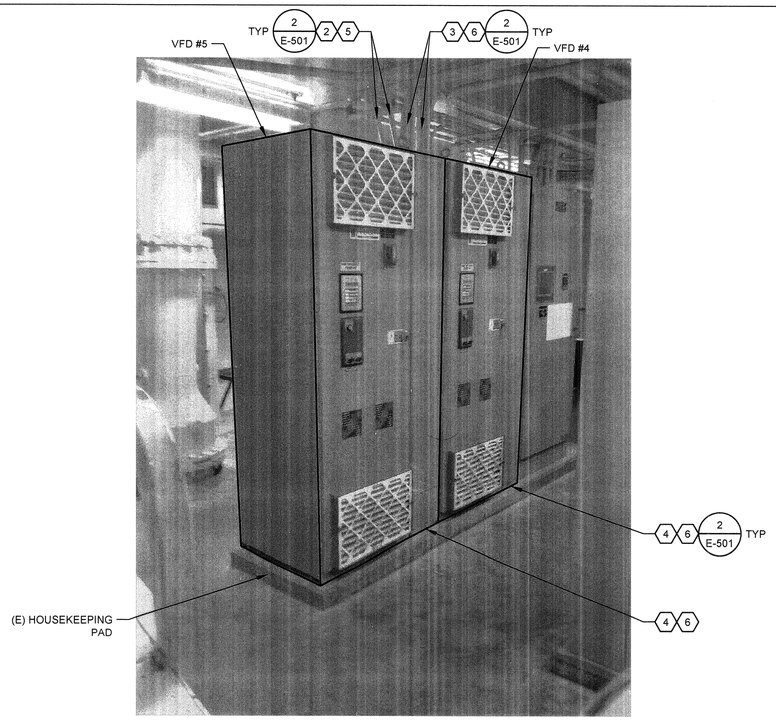

1 VFD #4 AND #5

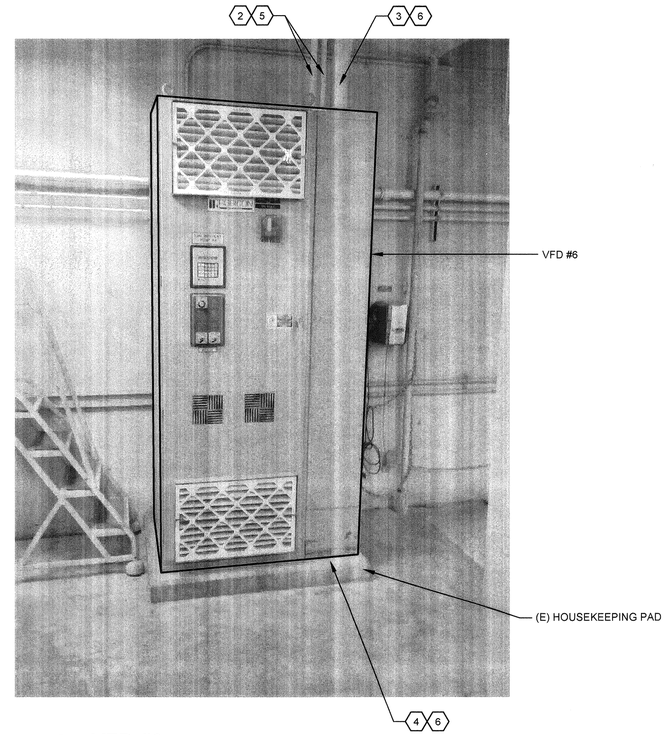

2 VFD #6

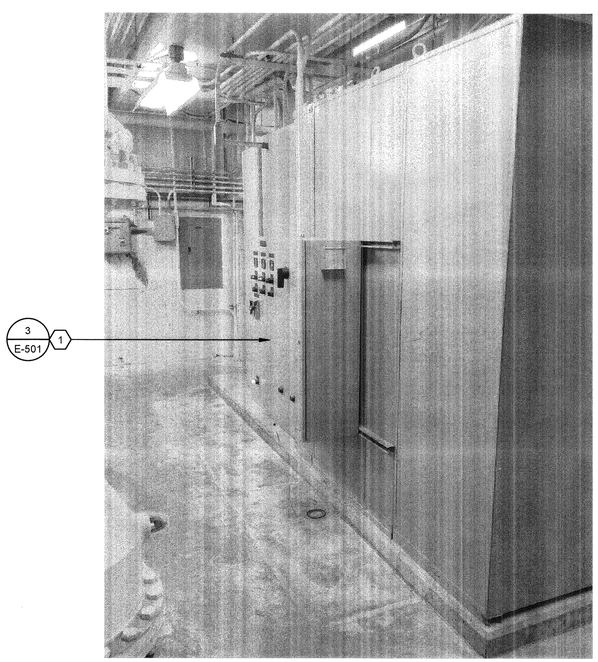

3 HVAC PANEL

KEYNOTES

1. UNBOLT (E) HVAC CONTROL PANEL FROM REAR OF VFD. PROVIDE STRUT TO SUPPORT (E) HVAC CONTROL PANEL FROM THE FLOOR.
2. DISCONNECT CONTROL CONDUCTORS BETWEEN VFD AND PLC.
3. DISCONNECT POWER CONDUIT FROM VFD ENCLOSURE. PROVIDE NEW FEEDER CONDUCTORS FROM SWBD 30 TO CONNECT TO BREAKER LUGS.
4. DISCONNECT MOTOR FEEDERS FROM VFD OUTPUT LUGS. REMOVE FEEDERS FROM CONDUIT.
5. RECONNECT EXISTING CONTROL WIRES BETWEEN VFD AND PLC. MAKE FINAL WIRING CONNECTION TO PLC AT CITY'S DIRECTION.
6. RECONNECT EXISTING MOTOR FEEDER CONDUCTORS.

REGISTERED PROFESSIONAL ENGINEER
No. E15580
Exp. 12/31/19
ELECTRICAL
STATE OF CALIFORNIA

GHD Inc.
2235 Mercury Way, Suite 150
Santa Rosa, California 95407 USA
T 1 707 523 1010 F 1 707 527 8679
W www.ghd.com

No.	Date	Revision	By

City of Santa Rosa

LAGUNA TREATMENT PLANT
PRIMARY INFLUENT PUMP DRIVE REPLACEMENT

NORTH HEADWORKS ELEVATIONS

SCALE: NONE
DATE: JAN 24, 2019
DWN BY: JJVL
CHK BY: RPG
APPROVED: *Deputy Director – Engineering*
By Lori Urbanek Date 2/4/19

CONTRACT NO. C02051
DRAWING NO. E-302
SHEET 6 OF 9
FILE NO. 2018-0044

LAGUNA TREATMENT PLANT PRIMARY INFLUENT PUMP DRIVE REPLACEMENT

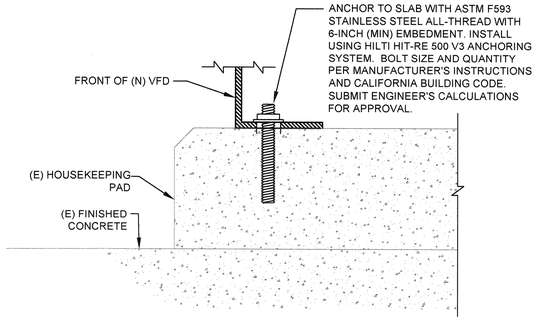

1 EQUIPMENT ANCHORING

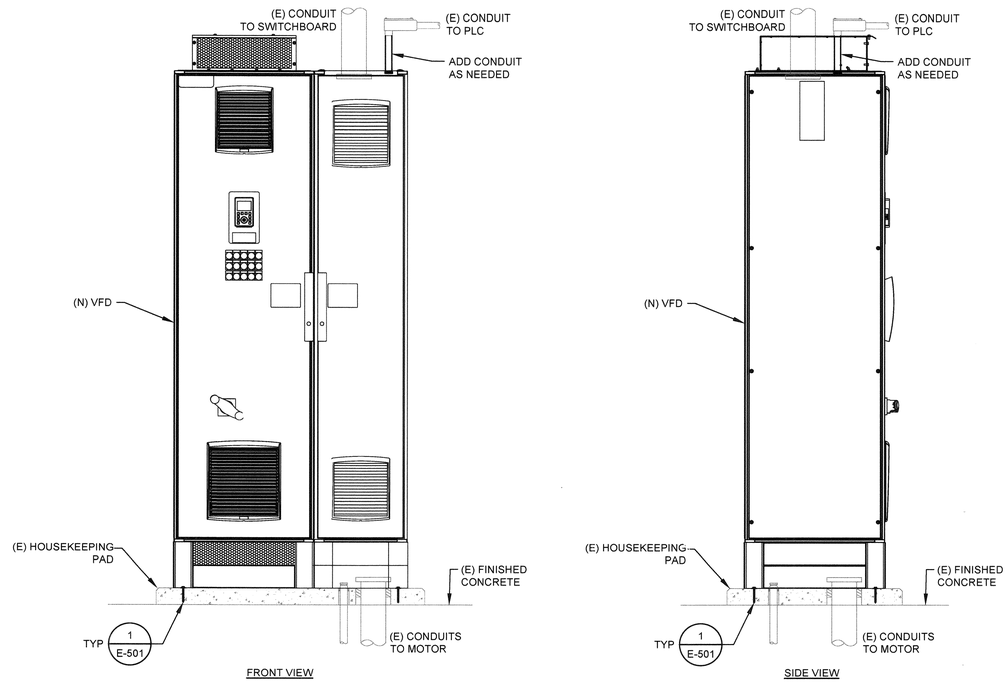

2 EXISTING CONDUIT ENTRY

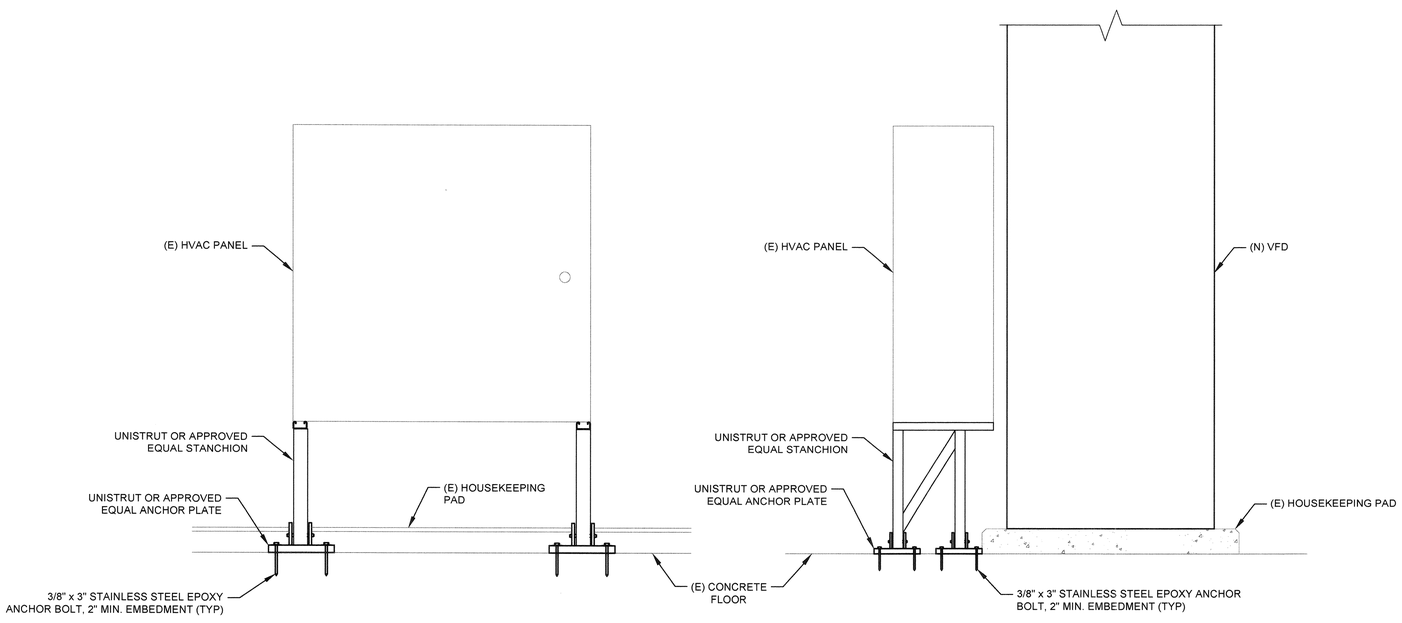

3 HVAC PANEL SUPPORT

REGISTERED PROFESSIONAL ENGINEER
No. E15580
Exp. 12/31/19
ELECTRICAL
STATE OF CALIFORNIA

GHD Inc.
2235 Mercury Way, Suite 150
Santa Rosa, California 95407 USA
T 1 707 523 1010 F 1 707 527 8679
W www.ghd.com

No.	Date	Revision	By

DATE: JAN 24, 2019
SCALE: NONE
CHK BY: RPG
DWN BY: JJVL
APPROVED: Deputy Director – Engineering
By Lori Urbanek Date 2/4/19

City of Santa Rosa

LAGUNA TREATMENT PLANT
PRIMARY INFLUENT PUMP DRIVE REPLACEMENT

ELECTRICAL DETAILS

CONTRACT NO. C02051
DRAWING NO. E–501
SHEET 7 OF 9
FILE NO. 2018–0044

LAGUNA TREATMENT PLANT PRIMARY INFLUENT PUMP DRIVE REPLACEMENT

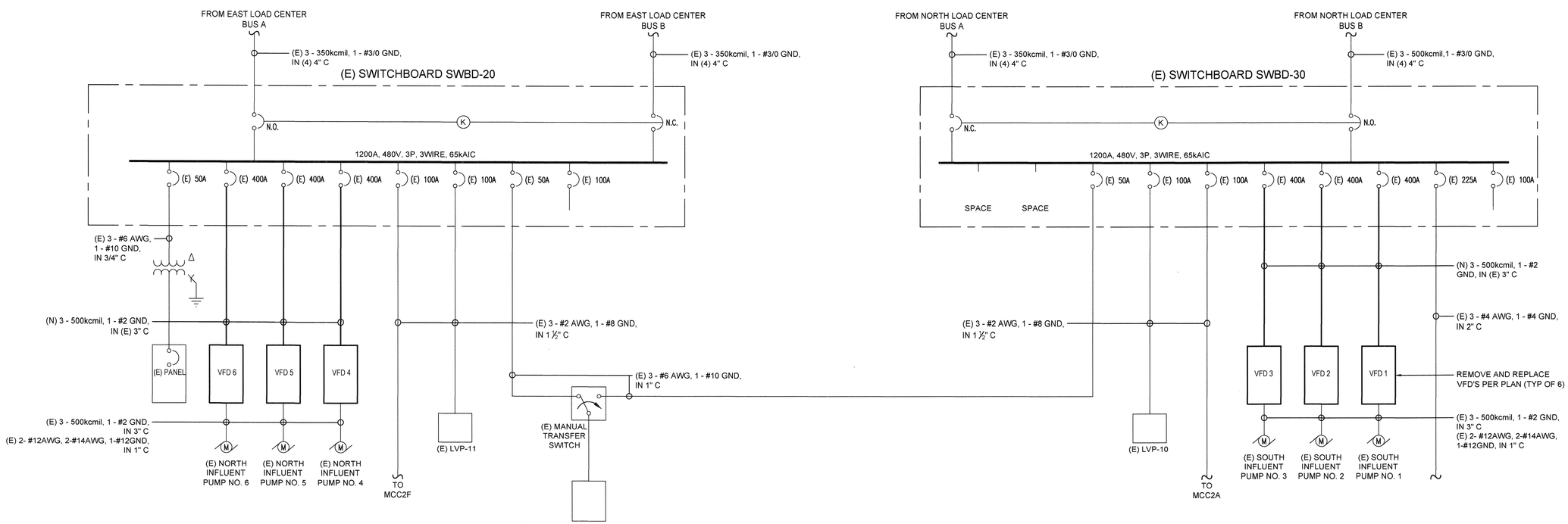

REGISTERED PROFESSIONAL ENGINEER
Ramon G. Gomez
No. E15580
Exp. 12/31/19
ELECTRICAL
STATE OF CALIFORNIA

GHD Inc.
2235 Mercury Way, Suite 150
Santa Rosa, California 95407 USA
T 1 707 523 1010 F 1 707 527 8679
W www.ghd.com

No.	Date	Revision	By

DATE: JAN 24, 2019
CHK BY: RPG
SCALE: NONE
DWN BY: JJVL
APPROVED: Deputy Director – Engineering
By Lori Urbanek Date 2/4/19

City of Santa Rosa

LAGUNA TREATMENT PLANT PRIMARY INFLUENT PUMP DRIVE REPLACEMENT

SINGLE LINE DIAGRAM

CONTRACT NO. C02051
DRAWING NO. E-601
SHEET 8 OF 9
FILE NO. 2018-0044

LAGUNA TREATMENT PLANT PRIMARY INFLUENT PUMP DRIVE REPLACEMENT

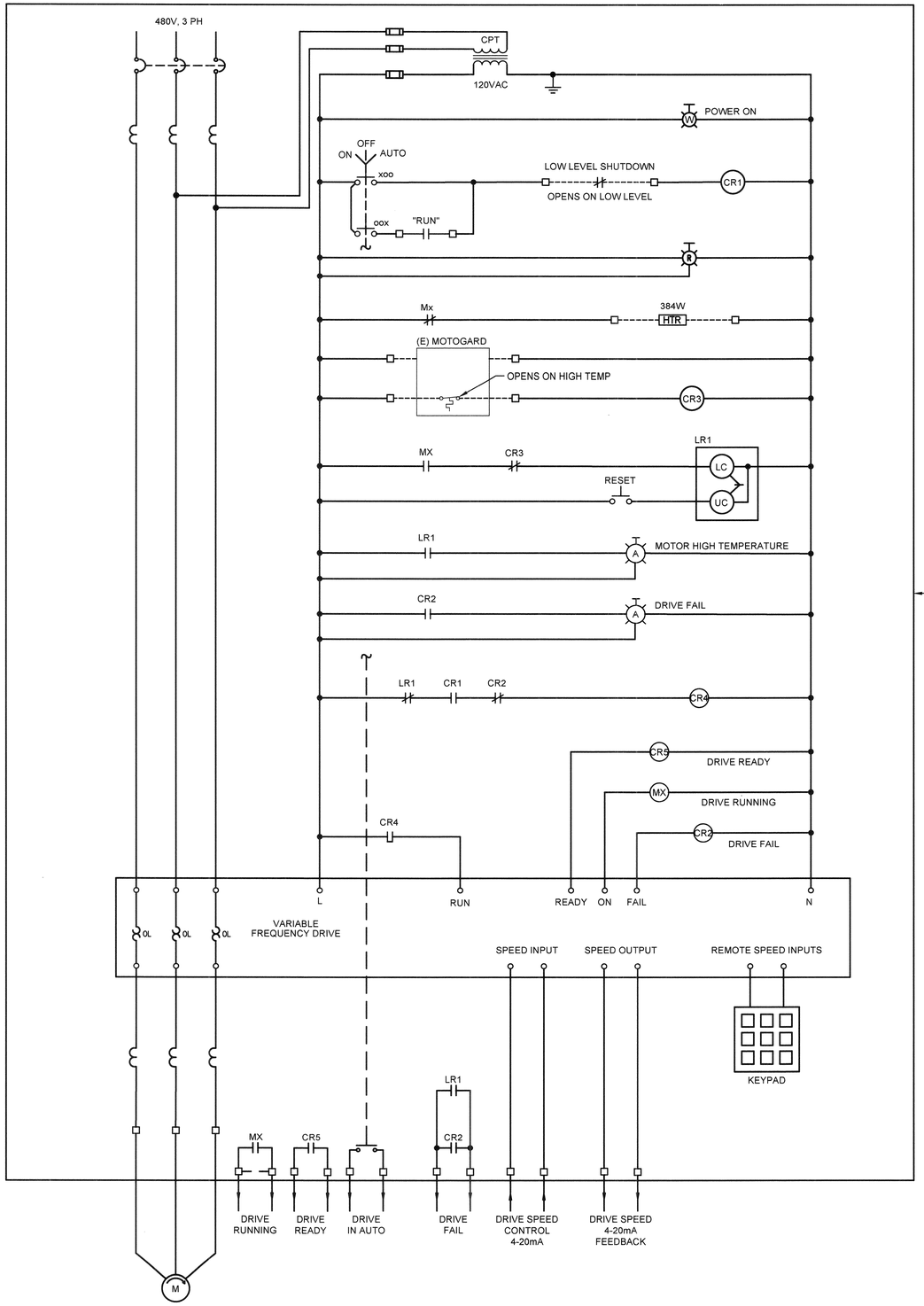

REGISTERED PROFESSIONAL ENGINEER
No. E15580
Exp. 12/31/19
ELECTRICAL
STATE OF CALIFORNIA

GHD Inc.
2235 Mercury Way, Suite 150
Santa Rosa, California 95407 USA
T 1 707 523 1010 F 1 707 527 8679
W www.ghd.com

No.	Date	Revision	By

DATE: JAN 24, 2019
CHK BY: RPG
SCALE: NONE
DWN BY: JJVL
APPROVED: Deputy Director – Engineering
By _____ Date 2/4/19
Lori Urbanek

City of Santa Rosa

LAGUNA TREATMENT PLANT
PRIMARY INFLUENT PUMP
DRIVE REPLACEMENT

CONTROL DIAGRAM

CONTRACT NO.
C02051

DRAWING NO. E–602

SHEET 9 OF 9

FILE NO. 2018–0044

LAGUNA TREATMENT PLANT PRIMARY INFLUENT PUMP DRIVE REPLACEMENT