CITY OF SANTA ROSA

IMPROVEMENT PLANS FOR

Laguna Treatment Plant Chillers and Climate Control Upgrade at Administration and Annex Building

CONTRACT No. C02105

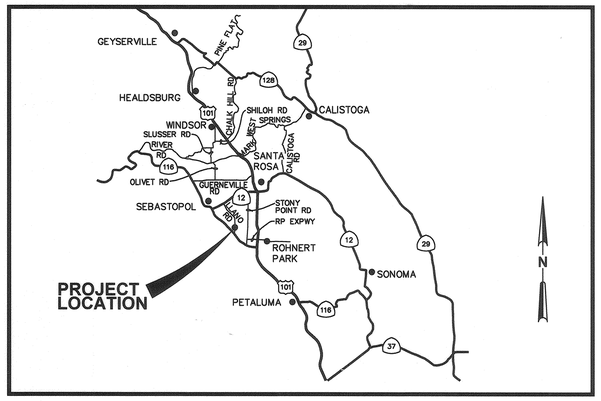

VICINITY MAP

NOT TO SCALE

DRAWING INDEX		
SHEET NO.	DRAWING NO.	SHEET TITLE
1.	G-001	COVER SHEET
2.	M-001	MECHANICAL LEGEND, ABBREVIATIONS & NOTES
3.	M-102	MECHANICAL DEMOLITION FLOOR PLAN - ANNEX BLDG
4.	M-103	MECHANICAL FLOOR PLAN - ANNEX BLDG
5	M-401	MECHANICAL ENLARGED DEMOLITION PLAN - ADMIN BLDG
6.	M-402	MECHANICAL ENLARGED PLAN - ADMIN BLDG
7.	M-501	MECHANICAL DETAILS - 1
8.	M-601	MECHANICAL SCHEDULES
9.	E-001	ELECTRICAL LEGENDS, ABBREVIATIONS & NOTES
10.	E-101	ELECTRICAL FLOOR PLAN - ADMIN BLDG
11.	E-102	ELECTRICAL FLOOR PLAN - ANNEX BLDG
12.	E-401	ELECTRICAL ENLARGED PLAN - ADMIN BLDG
13.	E-501	MCC 28W ELEVATIONS
14.	E-601	SINGLE LINE DIAGRAMS - ADMIN BLDG
15.	E-602	SLD - BOILER ROOM, ELEVATION AND SCHEDULE
16.	E-603	CONTROLS BLOCK DIAGRAM

GENERAL NOTES:

1. ALL WORKMANSHIP, MATERIALS AND CONSTRUCTION SHALL CONFORM TO THE CITY OF SANTA ROSA STANDARD PLANS, THE CONSTRUCTION SPECIFICATIONS FOR PUBLIC IMPROVEMENTS, THE SPECIAL PROVISIONS FOR THIS PROJECT AND THE STATE STANDARD SPECIFICATIONS AND STANDARD PLANS. THE CONTRACTOR IS RESPONSIBLE FOR UNDERSTANDING ALL STANDARDS PERTAINING TO THIS PROJECT.

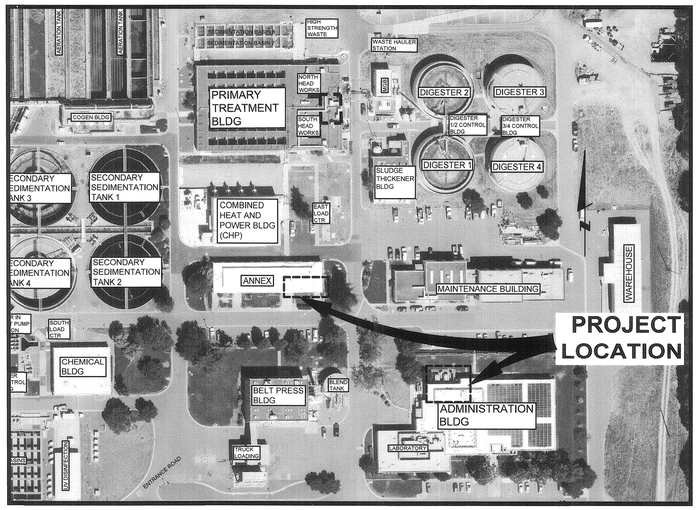

LOCATION MAP

RECORD PLAN DATA

PROJECT START:
PROJECT END:
GEN. CONTRACTOR:
SUPERINTENDENT:
FOREMAN:
BOILER MANUFACTURER:
BOILER MODEL NUMBER:
BOILER SERIAL NUMBERS:

CHILLER MANUFACTURER:
CHILLER MODEL NUMBER:
CHILLER SERIAL NUMBERS:

CONSTRUCTION MANAGER:
INSPECTOR:
RECORD PLANS BY:

ADDITIONAL INFO:

CONSTRUCTION DOCUMENTS 06/26/2019

GHD Inc.
2235 Mercury Way, Suite 150
Santa Rosa, California 95407 USA
T 1 707 523 1010 F 1 707 527 8679
W www.ghd.com

REGISTERED PROFESSIONAL ENGINEER TERRY WONG No. M29662 Exp. 6/30/21 MECHANICAL CALIFORNIA 7/3/19

No.	Date	Revision	By	Dept.	Signature	Date
–	06/26	CONSTRUCTION DOCUMENTS	TW	Design/Construction Subregional Operations	CAG for TRACY BUEHNS Joe Edwards	6-27-19 6/27/19

DATE: APRIL 12, 2019 CHK BY: TW

APPROVED: Deputy Director – Engineering Date 6/28/19

By Lori Urbanek

SCALE: AS SHOWN DWN BY: EO/JJVL

CONSTRUCTION DOCUMENTS

City of Santa Rosa

CHILLERS AND CLIMATE CONTROL UPGRADE AT ADMINISTRATION AND ANNEX BUILDING

COVER SHEET

CONTRACT NO. C02105

DRAWING NO. G–001

SHEET 1 OF 16

FILE NO. 2018–049

LAGUNA TREATMENT PLANT CHILLERS AND CLIMATE CONTROL UPGRADE AT ADMINISTRATION AND ANNEX BUILDING

ABBREVIATIONS

A	AMPERES, AREA
ABS	ACRYLONITRILE-BUTADIENE -STYRENE
AD	AREA DRAIN
AFF	ABOVE FINISHED FLOOR
AG	ABOVE GRADE
AHU	AIR HANDLING UNIT
APPROX	APPROXIMATE
AS	AIR SEPARATOR
AVG	AVERAGE
B	BOILER
BD	BALANCE DAMPER
BDD	BACK DRAFT DAMPER
BFP	BACK FLOW PREVENTER
BG	BELOW GRADE
BHP	BRAKE HORSEPOWER
BOD	BOTTOM OF DUCT
BTU	BRITISH THERMAL UNIT
BTUH	BRITISH THERMAL UNIT PER HOUR
BWP	BOILER WATER PUMP
C	CELSIUS
℄	CENTERLINE
CCW	COUNTER CLOCKWISE
CD	CEILING DIFFUSER, CONDENSATE DRAIN
CFM	CUBIC FEET PER MINUTE
CH	CHILLER
CHW	CHILLED WATER
CHWP	CHILLED WATER PUMP
CHWR	CHILLED WATER RETURN
CHWS	CHILLED WATER SUPPLY
CI	CAST IRON
CMPR	COMPRESSOR
CONT	CONTINUED
CT	COOLING TOWER
CU	COPPER
CU FT	CUBIC FEET
CU IN	CUBIC INCHES
CW	COLD WATER, CLOCKWISE
CWP	CONDENSER WATER PUMP
CWR	CONDENSER WATER RETURN,
CWS	CONDENSER WATER SUPPLY
CWV	COMBINATION WASTE & VENT
D	DEPTH
DB	DECIBEL, DRY BULB
DEG	DEGREE(S)
DIA	DIAMETER
DN	DOWN
DPT	DIFFERENTIAL PRESSURE TRANSMITTER
DS	DOWN SPOUT
DWG	DRAWING
(E)	EXISTING
EA	EACH
EAT	ENTERING AIR TEMPERATURE
ECC	ENGINEERING CONTROL CENTER
EF	EXHAUST FAN
EFF	EFFICIENCY
EG	EXHAUST GRILLE
ELEV	ELEVATION
ENT	ENTERING
ESP	EXTERNAL STATIC PRESSURE
ET	EXPANSION TANK
F	FLOW
FACP	FIRE ALARM CONTROL PANEL
FCO	FLOOR CLEAN OUT
FD	FLOOR DRAIN, FIRE DAMPER
FDC	FIRE DEPARTMENT CONNECTION
FM	FLOW METER
FP	FIRE PROTECTION
FPI	FINS PER INCH
FPM	FEET PER MINUTE
FPS	FEET PER SECOND
FS	FLOW SWITCH
FSD	FIRE/SMOKE DAMPER
FSP	FIRE SPRINKLER
FT	FOOT, FEET
G	GAS
GA	GAUGE
GALV	GALVANIZED
GPD	GALLONS PER DAY
GPH	GALLONS PER HOUR
GPM	GALLONS PER MINUTE
GPS	GALLONS PER SECOND
HD	HEAD
HG	MERCURY
HHW	HEATING HOT WATER
HWR	HEATING WATER RETURN
HWS	HEATING WATER SUPPLY
HP	HORSEPOWER
HR	HOSE REEL, HOUR
HT	HEIGHT
HVAC	HEATING, VENTILATION &CONDITIONING
HW	HOT WATER
HWR	HOT WATER RETURN
HZ	FREQUENCY
ID	INSIDE DIAMETER
INVERT	INVERT ELEVATION
IW	INDIRECT WASTE
KW	KILOWATTS
KWH	KILOWATTS PER HOUR
L	LENGTH
LAT	LEAVING AIR TEMPERATURE
LBS	POUNDS
LF	LINEAR FEET
LPG	LIQUID PETROLEUM GAS
LTG	LIGHTING
LVG	LEAVING
LWT	LEAVING WATER TEMPERATURE
MAX	MAXIMUM
MBH	1,000 BTUH
MCC	MOTOR CONTROL CENTER
MD	MOTORIZED DAMPER
MFR	MANUFACTURER
MIN	MINIMUM, MINUTE
MTD	MOUNTED
MUA	MAKE UP AIR
(N)	NEW
NC	NORMALLY CLOSED, NOISE CRITERIA
NIC	NOT IN CONTRACT
NO	NORMALLY OPEN, NUMBER
NTS	NOT TO SCALE
OA	OUTSIDE AIR
OBD	OPPOSED BLADE DAMPER
OC	ON CENTER
OD	OUTSIDE DIAMETER
ORD	OVERFLOW ROOF DRAIN
PB	POLYBUTYLENE
PE	POLYETHYLENE
PPM	PARTS PER MILLION
POC	POINT OF CONNECTION
PSF	POUNDS PER SQUARE FOOT
PSI	POUNDS PER SQUARE INCH
PSIA	POUNDS PER SQUARE INCH, ABSOLUTE
PSIG	POUNDS PER SQUARE INCH, GAGE
PVC	POLYVINYL CHLORIDE
RA	RETURN AIR
RD	ROOF DRAIN
REQ	REQUIRED
RG	RETURN GRILLE
RH	RELATIVE HUMIDITY
RPM	REVOLUTIONS PER MINUTE
RPS	REVOLUTIONS PER SECOND
SAD	SEE ARCHITECTURAL DRAWINGS
STD	STANDARD
SOV	SHUT OFF VALVE
SD	SUPPLY DIFFUSER, STORM DRAIN
SS	SANITARY SEWER, STAINLESS STEEL
SR	SUPPLY REGISTER
TD	TEMPERATURE DIFFERENTIAL
TEMP	TEMPERATURE
TOD	TOP OF DUCT
TP	TOTAL STATIC PRESSURE
TYP	TYPICAL
UON	UNLESS OTHERWISE NOTED
V	VENT, VOLT
VEL	VELOCITY
VFD	VARIABLE FREQUENCY DRIVE
VOL	VOLUME
VP	VELOCITY PRESSURE
VTR	VENT THROUGH ROOF
W	WIDTH
W/	WITH
WB	WET BULB
WG	WATER GAGE, WALL GRILLE
W/O	WITHOUT
WRG	WALL RETURN GRILLE
WSR	WALL SUPPLY REGISTER
WH	WATER HEATER
WHA	WATER HAMMER ARRESTOR
XFMR	TRANSFORMER
YR	YEAR
Z	ZONE

MECHANICAL SYMBOLS LEGEND

HVAC

SYMBOL	DESCRIPTION
	DUCT SECTION, SUPPLY AIR UP
	DUCT SECTION, RETURN AIR UP
	DUCT SECTION, EXHAUST AIR UP
	DUCT SECTION, SUPPLY AIR DN
	DUCT SECTION, RETURN AIR DN
	DUCT SECTION, EXHAUST AIR DN
	FLEXIBLE DUCT
FSD	FIRE AND SMOKE DAMPER
FD	FIRE DAMPER
	DIRECTION OF FLOW
	MANUAL VOLUME DAMPER
	WALL SUPPLY OUTLET, RETURN GRILLE
	CEILING DIFFUSER
	CEILING RETURN
	CEILING EXHAUST
DD	DUCT SMOKE DETECTOR
T	THERMOSTAT
S	REMOTE SENSOR
CO2	CARBON DIOXIDE SENSOR
M	MOTORIZED ACTUATOR

SHEET ANNOTATION

1 KEYNOTE

1 DEMOLITION NOTE

MECH, ROOM 101 ROOM NAME AND ROOM NUMBER

DETAIL NUMBER
1
E5.1
DETAIL INDICATOR
SHEET NUMBER ON WHICH DETAIL APPEARS

SECTION LETTER
A
E3.1
SECTION INDICATOR
SHEET NUMBER ON WHICH SECTION APPEARS

EQUIPMENT TYPE
CH
3
EQUIPMENT TAG
EQUIPMENT SCHEDULE MARK NUMBER

AIR TERMINAL IDENTIFICATION

SUPPLY REGISTERS

CD-01
30
AIR TERMINAL MARK
AIRFLOW, CFM

NOTE:
NO ARROWS INDICATE
4-WAY AIRFLOW

RETURN REGISTERS

RD-01
30
AIR TERMINAL MARK
AIRFLOW, CFM

PIPING

SYMBOL	DESCRIPTION
FOS	FUEL OIL (SUPPLY)
FOR	FUEL OIL (RETURN)
CWS	CHILLED WATER SUPPLY
CWR	CHILLED WATER RETURN
HHWS	HEATING HOT WATER SUPPLY
HHWR	HEATING HOT WATER RETURN
CS	CONDENSER WATER SUPPLY
CR	CONDENSER WATER RETURN
RL	REFRIGERANT LIQUID
RS	REFRIGERANT SUCTION
AV	AUTOMATIC AIR VENT
	BLOW OFF STRAINER
	FILTER AND STRAINER LINE
P	PRESSURE GAGE
	PRESSURE GAGE AND COCK
	PRESSURE REDUCING VALVE
	RELIEF OR SAFETY VALVE
	STRAINER
	TEMPERATURE GAGE
	PUMP (PLAN)
	PUMP (SCHEMATIC)
	EXPANSION LOOP
	CAP
	CONCENTRIC REDUCER
	UNION
	THREE-WAY MANUAL VALVE
	BALANCING VALVE
	BALL VALVE
	BUTTERFLY VALVE
	DIAPHRAGM VALVE
	GATE VALVE
	GLOBE VALVE
	CHECK VALVE
	POINT OF CONNECTION
	FLEXIBLE CONNECTOR
	THERMOMETER
	PETE'S PLUG
	CONTROL VALVE (2-WAY)
	CONTROL VALVE (3-WAY)

GENERAL MECHANICAL NOTES

1. THESE DRAWINGS ARE BASED UPON AVAILABLE DOCUMENTS, WHICH MAY NOT ACCURATELY PORTRAY AS-BUILT CONDITIONS. EXISTING EQUIPMENT AND PIPING SIZES, LOCATIONS, AND DIMENSIONS SHALL BE VERIFIED IN THE FIELD PRIOR TO DEMOLITION AND CONSTRUCTION. NOTIFY THE ENGINEER IMMEDIATELY OF ALL DISCREPANCIES AFFECTING THE REMOVAL OF EXISTING EQUIPMENT AND PIPING, AND THE INSTALLATION OF NEW EQUIPMENT AND PIPING.
2. INSTALL PIPING AND DUCTWORK TO BEST SUIT FIELD CONDITIONS AND COORDINATE WITH THE INSTALLATION WORK OF OTHER TRADES. THESE DRAWINGS ARE DIAGRAMMATIC, DO NOT SCALE TO DETERMINE EXACT LOCATION OF PIPING.
3. PROTECT ALL EXISTING EQUIPMENT THAT IS TO REMAIN. VERIFY WITH OWNER WHAT SYSTEMS WILL REMAIN OPERATIONAL THROUGHOUT CONSTRUCTION. NOTIFY THE OWNER PRIOR TO SHUTTING DOWN ANCILLARY SYSTEMS OR EQUIPMENT.
4. REPAIR AND/OR REPLACE ALL EXISTING UTILITIES, STRUCTURAL ELEMENTS, EQUIPMENT, PIPING, CONDUIT, DUCTWORK, ETC. THAT IS DAMAGED OR BECOMES INOPERABLE AS A RESULT OF THIS WORK.
5. COORDINATE MODIFICATIONS TO EXISTING SYSTEMS WITH OWNER TO MINIMIZE SHUTDOWN TIME OF BUILDING SYSTEMS.
6. ALL SANITARY AND SANITARY VENT PIPING SHALL SLOPE AT ¼" PER 12" UNLESS OTHERWISE NOTED.
7. MERV 8 FILTER TO BE USED IN RETURN AIR DURING CONSTRUCTION.
8. DUCT OPENINGS AND MECHANICAL EQUIPMENT TO BE PROTECTED DURING CONSTRUCTION.
9. PROVIDE TEMPORARY CLIMATE CONTROL EQUIPMENT TO MAINTAIN BUILDING TEMPERATURE AT ALL TIMES DURING CONSTRUCTION.

REGISTERED PROFESSIONAL ENGINEER
JERRY WONG
No. M29592
Exp. 03/30/21
MECHANICAL
STATE OF CALIFORNIA
7/3/19

GHD Inc.
2235 Mercury Way, Suite 150
Santa Rosa, California 95407 USA
T 1 707 523 1010 F 1 707 527 8679
W www.ghd.com

No.	Date	Revision	By
–	06/26	CONSTRUCTION DOCUMENTS	TW

DATE: APRIL 12, 2019
CHK BY: TW
SCALE: NONE
DWN BY: EO
APPROVED: Deputy Director – Engineering
By Lori Urbanek Date 6/28/19

CONSTRUCTION DOCUMENTS
City of Santa Rosa
CHILLERS AND CLIMATE CONTROL UPGRADE AT ADMINISTRATION AND ANNEX BUILDING
MECHANICAL LEGEND, ABBREVIATIONS & NOTES
CONTRACT NO. C02105
DRAWING NO. M–001
SHEET 2 OF 16
FILE NO. 2018–049

LAGUNA TREATMENT PLANT CHILLERS AND CLIMATE CONTROL UPGRADE AT ADMINISTRATION AND ANNEX BUILDING

SHEET KEYNOTES

1. REMOVE EXISTING CHILLER, CHILLER CONTROL PANEL, CONTROL WIRING, AND ASSOCIATED APPURTENANCES. DISCONNECT FROM EXISTING CHILLED WATER PIPING.
2. REMOVE EXISTING CHILLED WATER PUMPS, CONTROL WIRING, AND ASSOCIATED APPURTENANCES.
3. REMOVE EXISTING HW PNUEMATIC CONTROL VALVE.
4. PROTECT CHILLED WATER CHEMICAL INJECTION POT IN PLACE.

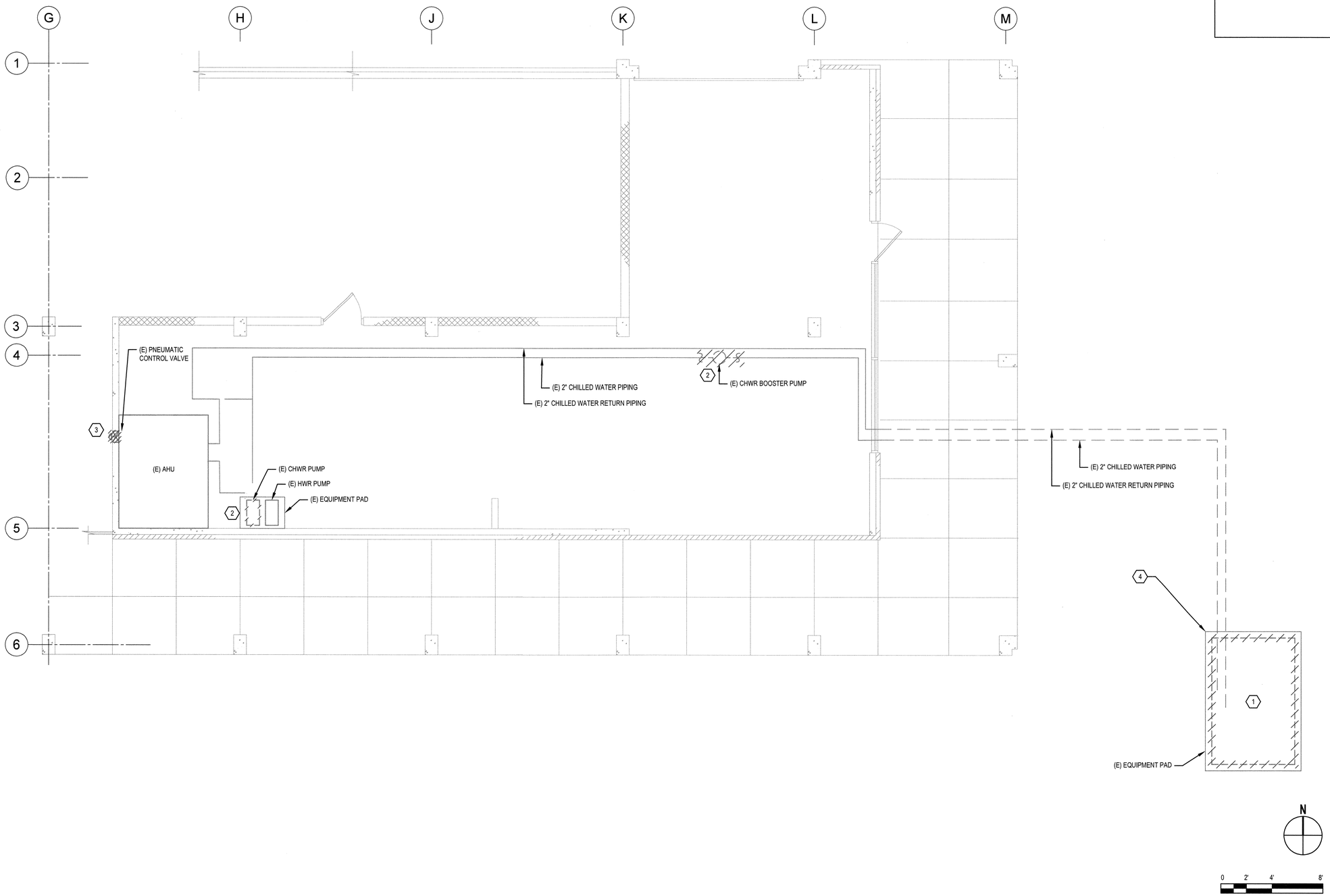

REGISTERED PROFESSIONAL ENGINEER
TERRY WONG
No. M29662
Exp. 6/30/21
MECHANICAL
STATE OF CALIFORNIA
4/13/19

GHD Inc.
2235 Mercury Way, Suite 150
Santa Rosa, California 95407 USA
T 1 707 523 1010 F 1 707 527 8679
W www.ghd.com

No.	Date	Revision	By
–	06/26	CONSTRUCTION DOCUMENTS	TW

SCALE: 1/4" = 1'-0" | DATE: APRIL 12, 2019
DWN BY: EO | CHK BY: TW
APPROVED: Deputy Director – Engineering
By Lori Urbanek Date 6/28/19

CONSTRUCTION DOCUMENTS

City of Santa Rosa

CHILLERS AND CLIMATE CONTROL UPGRADE AT ADMINISTRATION AND ANNEX BUILDING

MECHANICAL DEMOLITION FLOOR PLAN - ANNEX BLDG

CONTRACT NO. C02105

DRAWING NO. M-102

SHEET 3 OF 16

FILE NO. 2018-049

LAGUNA TREATMENT PLANT CHILLERS AND CLIMATE CONTROL UPGRADE AT ADMINISTRATION AND ANNEX BUILDING

SHEET KEYNOTES

1. NEW 2" INSULATED CHILLED WATER PIPE, CONNECT TO EXISTING.
2. CONNECT NEW CHILLER TO EXISTING 2" CHILLED WATER SUPPLY AND RETURN PIPING.
3. CONNECT NEW CHILLED WATER PUMP TO EXISTING 2" CHILLED WATER PIPING.
4. CONNECT NEW ELECTRIC 3-WAY CONTROL VALVE TO EXISTING CHILLED WATER PIPING.
5. CONNECT NEW ELECTRICAL 3-WAY CONTROL VALVE TO EXISTING HEATING HOT WATER PIPING

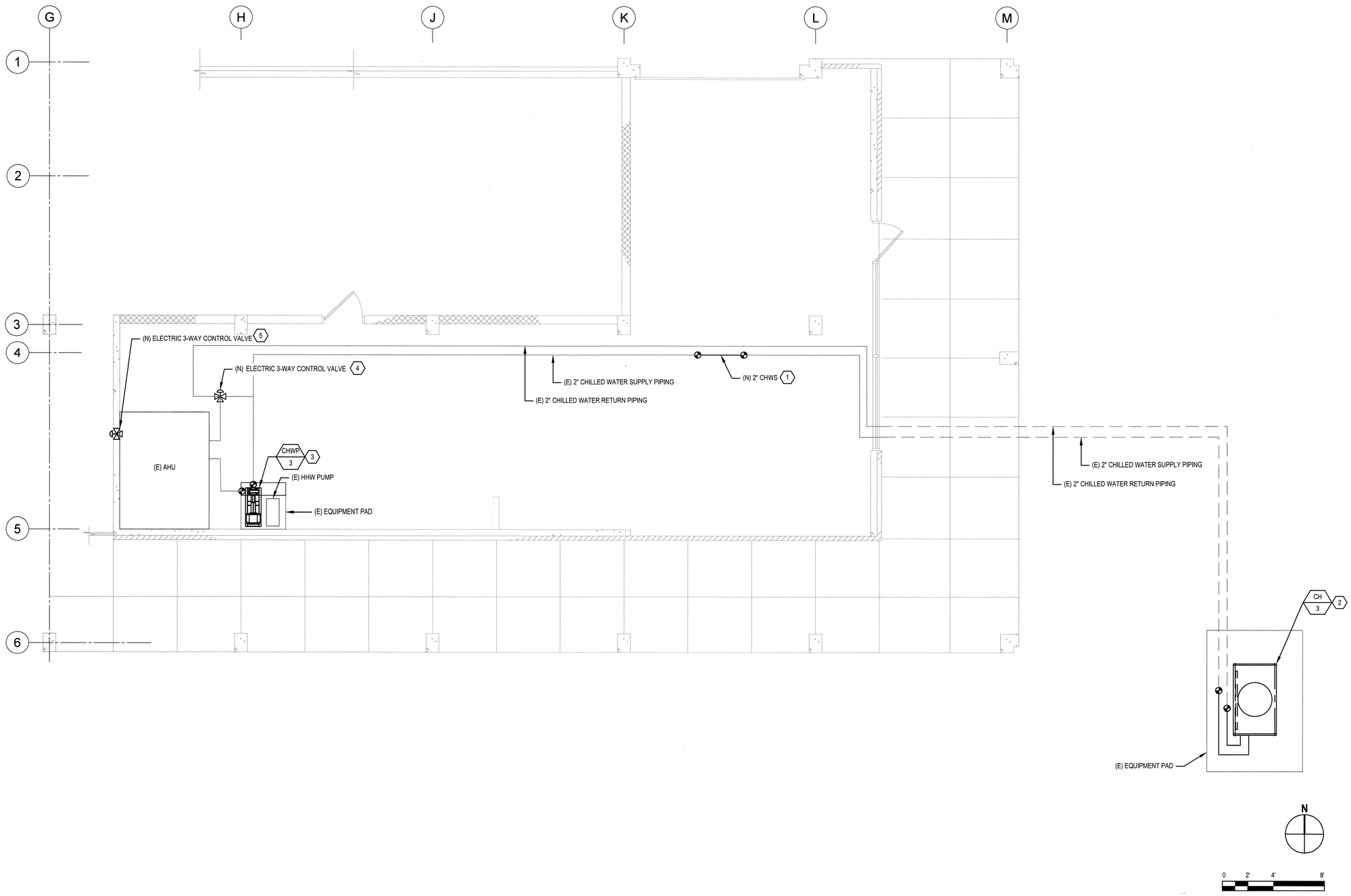

REGISTERED PROFESSIONAL ENGINEER
TERRY WONG
No. M29562
Exp. 6/30/21
MECHANICAL
STATE OF CALIFORNIA

GHD Inc.
2235 Mercury Way, Suite 150
Santa Rosa, California 95407 USA
T 1 707 523 1010 F 1 707 527 8679
W www.ghd.com

No.	Date	Revision	By
–	06/26	CONSTRUCTION DOCUMENTS	TW

DATE: APRIL 12, 2019
CHK BY: TW
SCALE: 1/4" = 1'-0"
DWN BY: EO
APPROVED: *Deputy Director – Engineering*
By *Lori Urbanek* Date 6/28/19
Lori Urbanek

CONSTRUCTION DOCUMENTS

City of Santa Rosa

CHILLERS AND CLIMATE CONTROL UPGRADE AT ADMINISTRATION AND ANNEX BUILDING

MECHANICAL FLOOR PLAN - ANNEX BLDG

CONTRACT NO. C02105
DRAWING NO. M–103
SHEET 4 OF 16
FILE NO. 2018–049

LAGUNA TREATMENT PLANT CHILLERS AND CLIMATE CONTROL UPGRADE AT ADMINISTRATION AND ANNEX BUILDING

SHEET KEYNOTES

1. REMOVE EXISTING BOILER, BOILER FLUE, BOILER CONTROL PANEL, CONTROL WIRING, AND ASSOCIATED APPURTENANCES. DISCONNECT FROM EXISTING NATURAL GAS AND HEATING HOT WATER PIPING.
2. REMOVE EXISTING CHILLER, CHILLER CONTROL PANEL, CONTROL WIRING, AND ASSOCIATED APPURTENANCES. DISCONNECT FROM EXISTING CHILLED WATER PIPING.
3. REMOVE EXISTING HOT WATER SUPPLY PUMPS, EXPANSION TANK, AIR SEPARATOR, CONTROL WIRING, AND ASSOCIATED APPURTENANCES.
4. REMOVE EXISTING CHILLED WATER SUPPLY PUMPS, EXPANSION TANK, CONTROL WIRING, AND ASSOCIATED APPURTENANCES.
5. PROTECT CHILLED AND HOT WATER CHEMICAL INJECTION POTS IN PLACE.

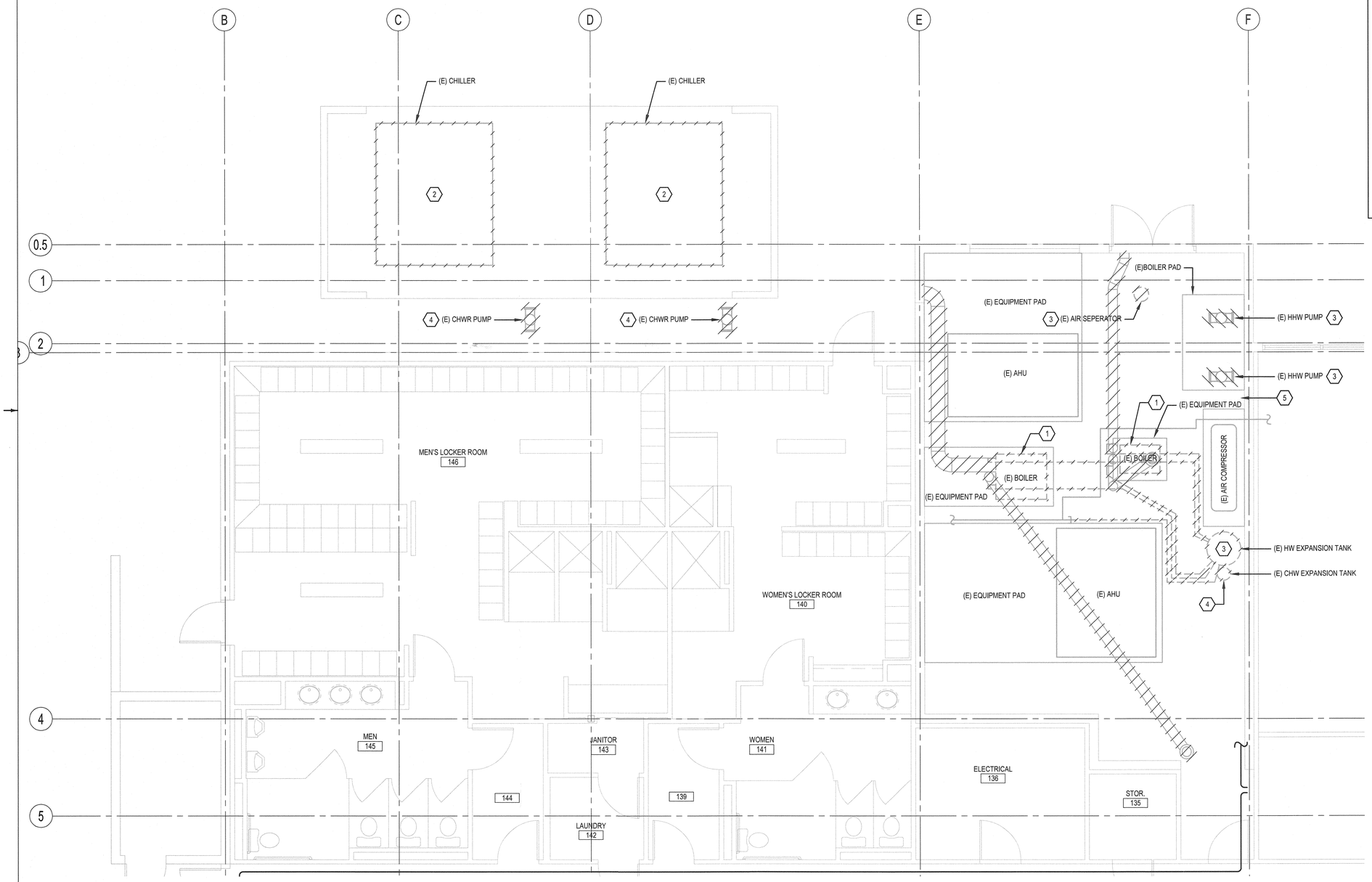

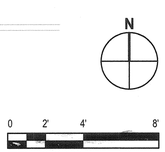

KEY PLAN

REGISTERED PROFESSIONAL ENGINEER
TERRY WONG
No. M28562
Exp. 6/30/21
MECHANICAL
CALIFORNIA
7/3/19

GHD Inc.
2235 Mercury Way, Suite 150
Santa Rosa, California 95407 USA
T | 707 523 1010 F | 707 527 8679
W www.ghd.com

No.	Date	Revision	By
–	06/26	CONSTRUCTION DOCUMENTS	TW

SCALE: 1/4" = 1'-0" | DATE: APRIL 12, 2019

DWN BY: EO | CHK BY: TW

APPROVED: *Deputy Director – Engineering*

By *Lori Urbanek* Date *6/28/19*

Lori Urbanek

CONSTRUCTION DOCUMENTS

City of Santa Rosa

CHILLERS AND CLIMATE CONTROL UPGRADE AT ADMINISTRATION AND ANNEX BUILDING

MECHANICAL ENLARGED DEMOLITION PLAN - ADMIN BLDG

CONTRACT NO. C02105

DRAWING NO. M-401

SHEET 5 OF 16

FILE NO. 2018-049

LAGUNA TREATMENT PLANT CHILLERS AND CLIMATE CONTROL UPGRADE AT ADMINISTRATION AND ANNEX BUILDING

SHEET KEYNOTES

1. CONNECT NEW INSULATED CHILLED WATER PIPING TO EXISTING.
2. CONNECT NEW EXPANSION TANK TO EXISTING CHILLED WATER PIPING.
3. CONNECT NEW EXPANSION TANK TO NEW HOT WATER RETURN PIPING.
4. CONNECT NEW GAS PIPING TO EXISTING GAS AFTER PRESSURE REGULATOR. ROUTE PIPING ABOVE DOOR.
5. CONNECT NEW HOT WATER SUPPLY AND RETURN PIPING TO EXISTING.
6. 12"Ø / 10"Ø CONCENTRIC VENT UP THRU ROOF.
7. 3/4" CONDENSATE DRAIN FROM BOTTOM OF FLUE, THRU NEUTRALIZATION KIT. TERMINATE AT CLOSEST FLOOR DRAIN OF FLOOR SINK WITH MINIMUM 1-1/2" AIR GAP.
8. INSTALL 3'-0" X 7'-0" BOILER PAD EXTENSION

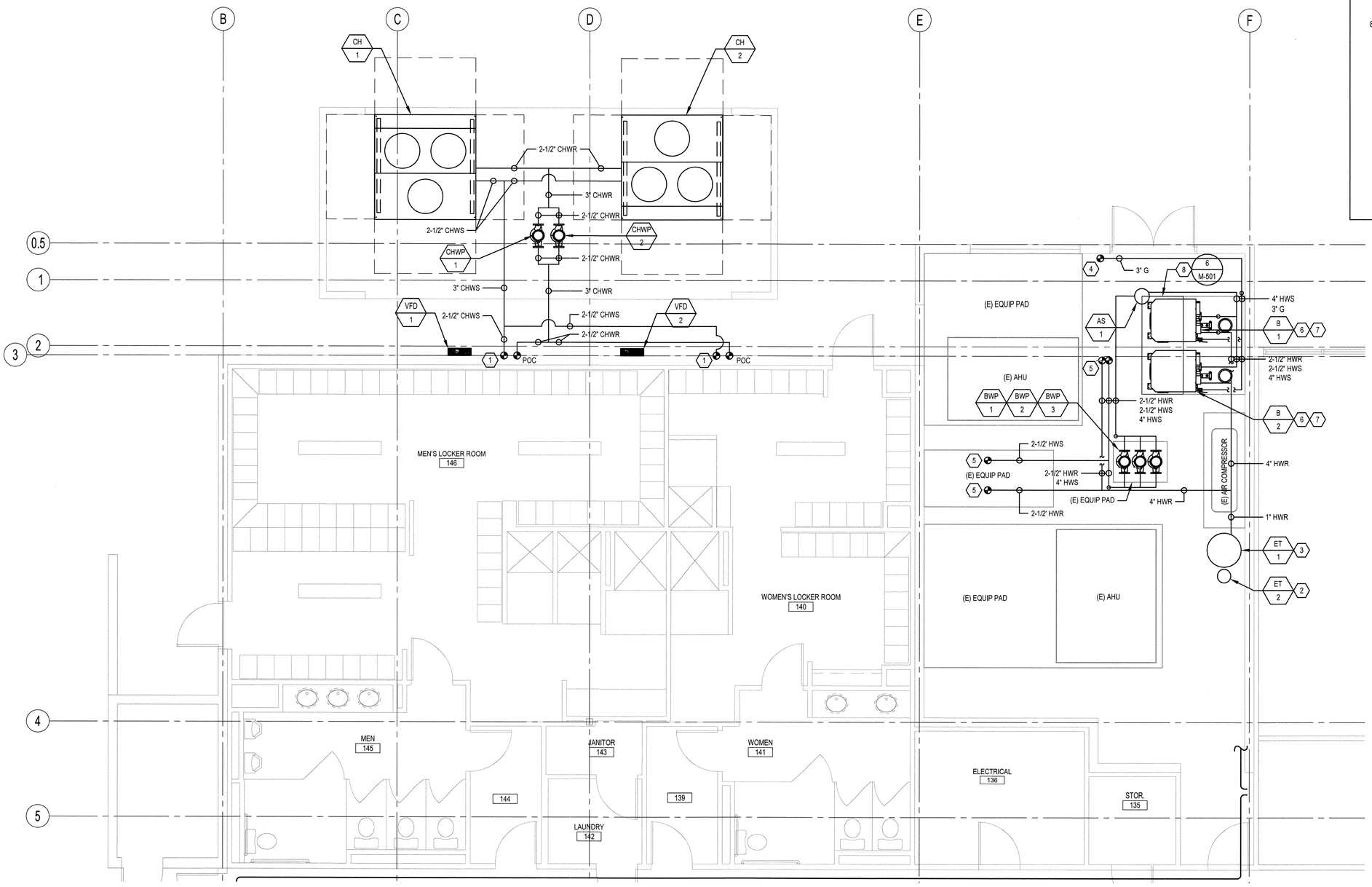

REGISTERED PROFESSIONAL ENGINEER
TERRY WONG
No. M39562
Exp. 6/30/21
MECHANICAL
CALIFORNIA

GHD Inc.
2235 Mercury Way, Suite 150
Santa Rosa, California 95407 USA
T 1 707 523 1010 F 1 707 527 8679
W www.ghd.com

No.	Date	Revision	By
–	06/26	CONSTRUCTION DOCUMENTS	TW

SCALE: 1/4" = 1'-0" | DATE: APRIL 12, 2019
DWN BY: EO | CHK BY: TW
APPROVED: Deputy Director – Engineering
By Lori Urbanek Date 6/28/19

CONSTRUCTION DOCUMENTS
City of Santa Rosa

CHILLERS AND CLIMATE CONTROL UPGRADE AT ADMINISTRATION AND ANNEX BUILDING

MECHANICAL ENLARGED PLAN - ADMIN BLDG

CONTRACT NO. C02105
DRAWING NO. M–402
SHEET 6 OF 16
FILE NO. 2018–049

LAGUNA TREATMENT PLANT CHILLERS AND CLIMATE CONTROL UPGRADE AT ADMINISTRATION AND ANNEX BUILDING

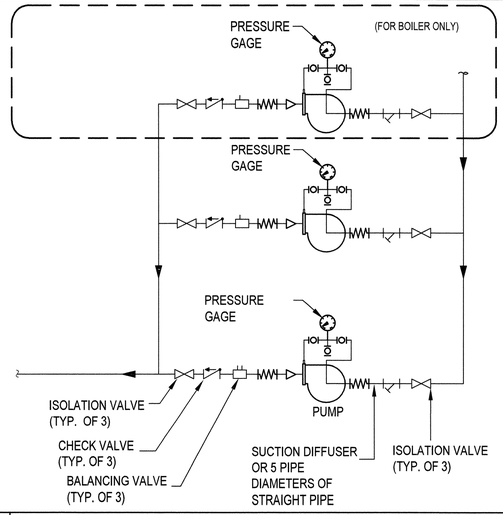

1 **PUMP PIPING DETAIL** NOT TO SCALE

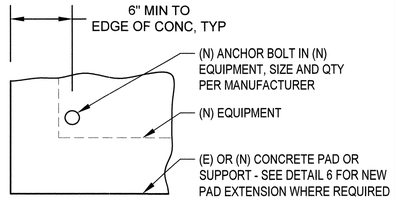

NOTES:
1. BOILER - 1/2" DIA. BOLT. MIN. 4" EMBEDMENT
2. CHILLER - 1/2" DIA. BOLT. MIN. 4" EMBEDMENT
3. PUMPS - 3/4" DIA. BOLT. MIN. 4" EMBEDMENT
4. ALL ANCHORS TO DRILL THRU PAD TO EMBEDMENT LENGTH LISTED INTO BUILDING SLAB (I.E. 4" PAD + 4" EMBEDMENT = 8" ANCHOR MIN.)
5. EPOXY SHALL BE SIMPSON SET-XP PER ESR-2508 OR HILI HIT RE-500 V3 PER ESR-3814

2 **CONCRETE ANCHOR DETAIL** NOT TO SCALE

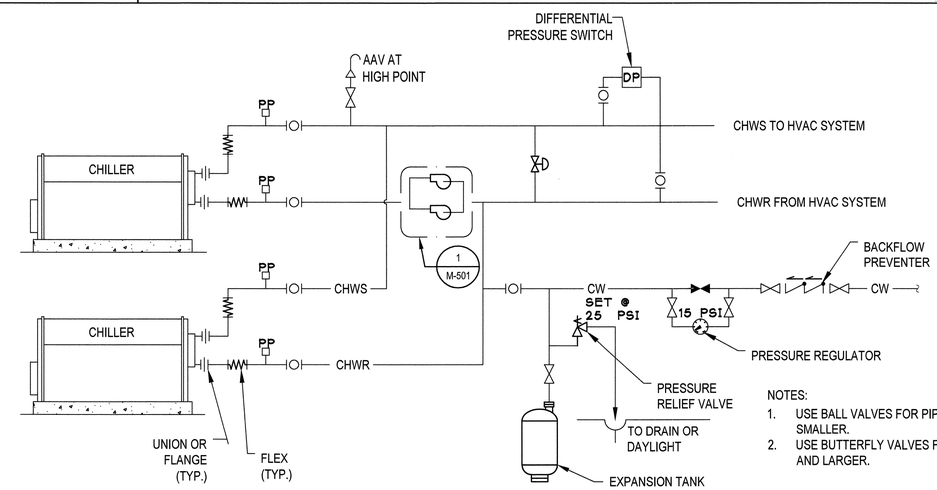

NOTES:
1. USE BALL VALVES FOR PIPE 2 1/2" AND SMALLER.
2. USE BUTTERFLY VALVES FOR PIPE 3" AND LARGER.

3 **ADMINISTRATION BUILDING - CHILLER PIPING DIAGRAM** NOT TO SCALE

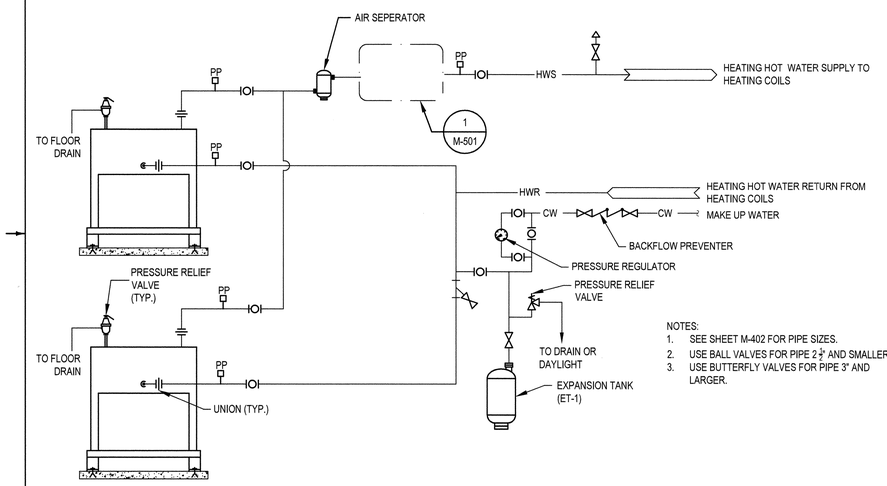

NOTES:
1. SEE SHEET M-402 FOR PIPE SIZES.
2. USE BALL VALVES FOR PIPE 2 1/2" AND SMALLER.
3. USE BUTTERFLY VALVES FOR PIPE 3" AND LARGER.

4 **BOILER PIPING DIAGRAM** NOT TO SCALE

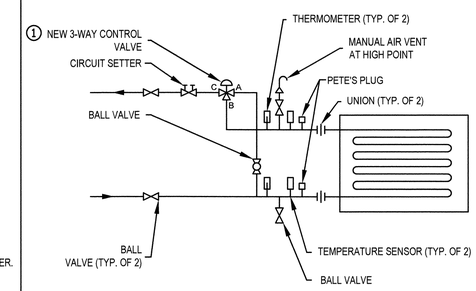

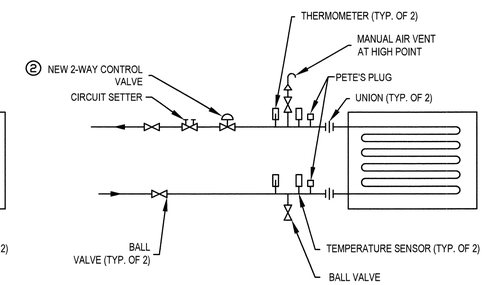

NOTES:
① VALVE PORT DESIGNATIONS: A=N.C., B=N.O. & C=COMMON, REFER TO CONTROL DRAWINGS FOR SPECIFIC VALVE PORT DESIGNATIONS.
② REFER TO CONTROL DRAWINGS FOR SPECIFIC VALVE PORT DESIGNATIONS.

5 **CONTROL VALVE PIPNG DETAIL** NOT TO SCALE

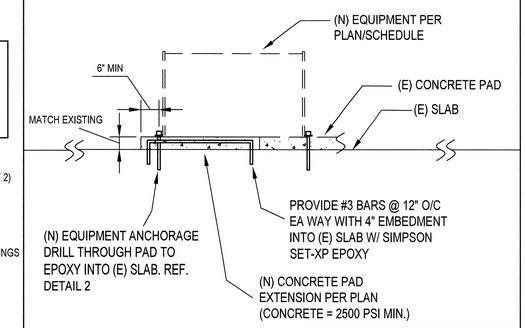

6 **HOUSEKEEPING PAD EXTENSION** NOT TO SCALE

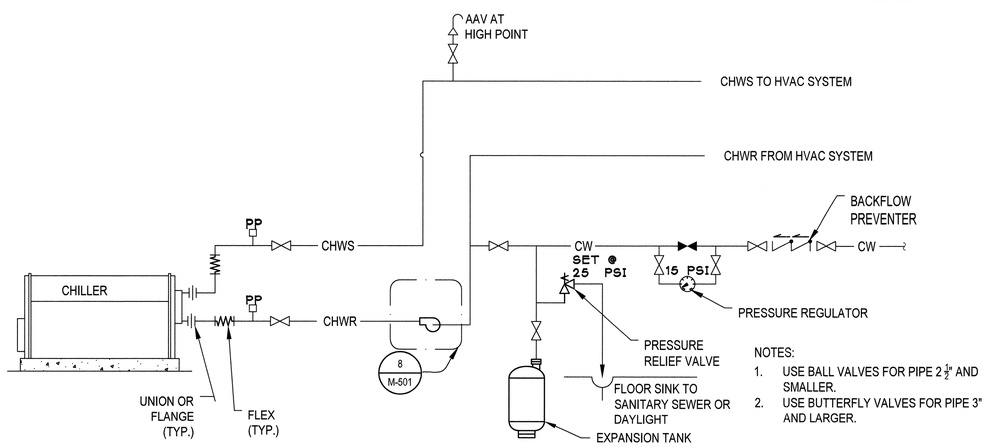

NOTES:
1. USE BALL VALVES FOR PIPE 2 1/2" AND SMALLER.
2. USE BUTTERFLY VALVES FOR PIPE 3" AND LARGER.

7 **ANNEX BUILDING - CHILLER PIPING DIAGRAM** NOT TO SCALE

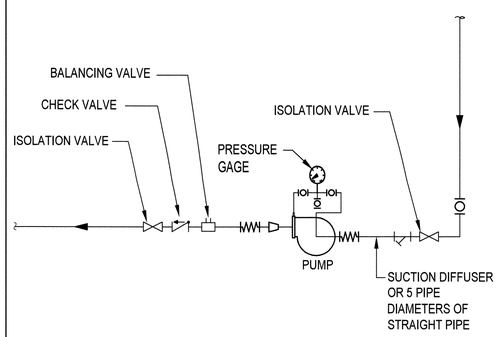

8 **ANNEX BUILDING PUMP PIPING DETAIL** NOT TO SCALE

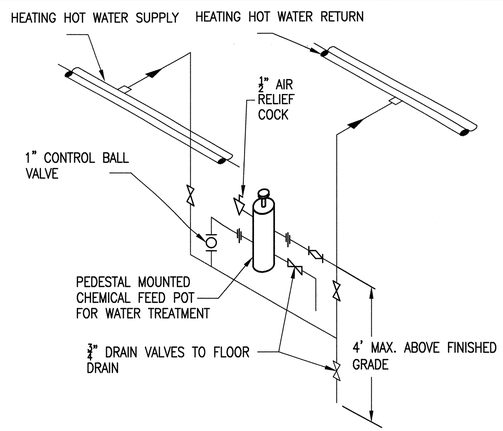

9 **CHEMICAL FEED SCHEMATIC** NOT TO SCALE

REGISTERED PROFESSIONAL ENGINEER — TERRY WONG — No. M28662 — Exp. 6/30/21 — MECHANICAL — STATE OF CALIFORNIA — 11/21/19

GHD Inc.
2235 Mercury Way, Suite 150
Santa Rosa, California 95407 USA
T 1 707 523 1010 F 1 707 527 8679
W www.ghd.com

No.	Date	Revision	By
–	06/26	CONSTRUCTION DOCUMENTS	TW

DATE: APRIL 12, 2019 — CHK BY: TW — DWN BY: EO — SCALE: NONE

APPROVED: Deputy Director – Engineering — By Lori Urbanek — Date 6/28/19

CONSTRUCTION DOCUMENTS
City of Santa Rosa

CHILLERS AND CLIMATE CONTROL UPGRADE AT ADMINISTRATION AND ANNEX BUILDING

MECHANICAL DETAILS - 1

CONTRACT NO. C02105
DRAWING NO. M–501
SHEET 7 OF 16
FILE NO. 2018–049

LAGUNA TREATMENT PLANT CHILLERS AND CLIMATE CONTROL UPGRADE AT ADMINISTRATION AND ANNEX BUILDING

AIR COOLED CHILLER SCHEDULE

MARK	MANUFACTURER	MODEL	NOMINAL TONAGE	EVAPORATOR ENT. WATER TEMP., °F	EVAPORATOR LVG. WATER TEMP., °F	EVAPORATOR GPM	EVAPORATOR PRESSURE DROP, FT.	WATER CONNECTION (INCH)	REFRIGERANT	ELECTRICAL VOLTS	ELECTRICAL PHASE	ELECTRICAL HZ	ELECTRICAL AMPS	WEIGHT (LBS)	SERVICE
CH-1	CARRIER	30RAP050	50	55	45	115	6.8	2-1/2"	R-410A	460	3	60	106.9	2300	ADMINISTRATION BUILDING
CH-2	CARRIER	30RAP050	50	55	45	115	6.8	2-1/2"	R-410A	460	3	60	106.9	2300	ADMINISTRATION BUILDING
CH-3	CARRIER	30RAP016	15	55	45	32	10.3	2"	R-410A	460	3	60	32.5	800	ANNEX BUILDING

REMARKS

1. SECUIRTY GRILLES AND HAIL GUARDS
2. UNIT MOUNTED NON-FUSED DISCONNECT
3. MICRO CHANNEL HEAT EXCHANGER, E-COATING
4. HIGH EFFICIENCY VARIABLE SPEED CONDENSER FAN
5. FREEZE PROTECTION, EVAPORATOR HEATER

BOILER SCHEDULE

MARK	MANUFACTURER	MODEL	INPUT (MBH)	OUTPUT (MBH)	THERMAL EFFICIENCY	EWT (DEG. F)	LWT (DEG. F)	MODULATING BURNER TURNDOWN	CONNECTIONS GAS	CONNECTIONS WATER - SUPPLY/RETURN	CONNECTIONS VENT	CONNECTIONS AIR INLET	CONNECTIONS RELIEF	ELECTRICAL VOLTS	ELECTRICAL PHASE	ELECTRICAL HZ	ELECTRICAL MFS	WEIGHT (LBS)	REMARKS
B-1	CAMUS	DR-3000	3,000	2,835	96%	120	150	5:1	1-1/2"	3"	10"	12"	1"	208	1	60	30	1555	1,2
B-2	CAMUS	DR-3000	3,000	2,835	96%	120	150	5:1	1-1/2"	3"	10"	12"	1"	208	1	60	30	1555	1,2

1. CONDENSATE TREATMENT ASSEMBLY
2. CATEGORY II COMBINATION VENTING

PUMP SCHEDULE

MARK	MANUFACTURER	MODEL	FLOW (GPM)	HEAD (FT)	BHP	ELECTRICAL HP	ELECTRICAL VOLT	ELECTRICAL PHASE	ELECTRICAL RPM	SERVICE	REMARKS
CHWP-1	BELL & GOSSETT	e80-4x4x7	230	45	3.7	5	460	3	1750	ADMIN. BLDG. CHILLER	1
CHWP-2	BELL & GOSSETT	e80-4x4x7	230	45	3.7	5	460	3	1750	ADMIN. BLDG. CHILLER	1
CHWP-3	BELL & GOSSETT	e1510-1.25AD	32	42	0.6	1	460	3	1750	ANNEX BLDG. CHILLER	
BWP-1	BELL & GOSSETT	e80-4x4x7	189	45	3.1	5	460	3	1750	ADMIN. BLDG. BOILER	
BWP-2	BELL & GOSSETT	e80-4x4x7	189	45	3.1	5	460	3	1750	ADMIN. BLDG. BOILER	
BWP-3	BELL & GOSSETT	e80-4x4x7	189	45	3.1	5	460	3	1750	ADMIN. BLDG. BOILER	

1. PROVIDE WITH VARIABLE FREQUENCY DRIVE

EXPANSION TANK SCHEDULE

MARK	MANUFACTURER	MODEL	TANK VOLUME (GAL)	ACCEPTANCE VOLUME (GAL)	WEIGHT (LBS)	SERVICE
ET-1	BELL & GOSSETT	B-130LA	34	27	410	BOILER HOT WATER
ET-2	BELL & GOSSETT	B-85LA	22	11	270	CHILLED WATER

VARIABLE FREQUENCY DRIVE SCHEDULE

MARK	MFR	MODEL	ELECTRICAL HP	ELECTRICAL VOLT	ELECTRICAL PHASE	ELECTRICAL AMPS	ELECTRICAL RPM	SERVICE	REMARKS
VFD-1	ABB	ACH550-PCR	5	460	3		1750	CHWP-1	1,2,3
VFD-2	ABB	ACH550-PCR	5	460	3		1750	CHWP-2	1,2,3

NOTE:

1. MOTOR DATA IS PER NATIONAL ELECTRICAL CODE TABLE 430-150 FOR TYPICAL MOTORS FOR MOST APPLICATIONS AND IS PROVIDED AS TYPICAL DATA ONLY. ACTUAL DATA MAY VARY. COORDINATE DRIVE WITH ACTUAL DRIVEN EQUIPMENT.
2. PROVIDE NEMA 3R ENCLOSURE WITH INTEGRAL CIRCUIT BREAKER DISCONNECT AND TEMPERATURE CONTROL.
3. PROVIDE DRIVE WITH PROFINET FIELDBUS ADAPTER.

AIR SEPARATOR SCHEDULE

MARK	MANUFACTURER	MODEL	CAPACITY (GPM)	WEIGHT (LBS)	SERVICE
AS-1	ROLAIRTROL	R-3	190	xxx	BOILER HOT WATER

REGISTERED PROFESSIONAL ENGINEER
TERRY WONG
No. M28552
Exp. 6/30/21
MECHANICAL
STATE OF CALIFORNIA
4/3/19

GHD Inc.
2235 Mercury Way, Suite 150
Santa Rosa, California 95407 USA
T 1 707 523 1010 F 1 707 527 8679
W www.ghd.com

No.	Date	Revision	By
–	06/26	CONSTRUCTION DOCUMENTS	TW

DATE: APRIL 12, 2019
CHK BY: TW
SCALE: NONE
DWN BY: EO
APPROVED: Deputy Director – Engineering
By Lori Urbanek Date 4/29/19

CONSTRUCTION DOCUMENTS
City of Santa Rosa
CHILLERS AND CLIMATE CONTROL UPGRADE AT ADMINISTRATION AND ANNEX BUILDING
MECHANICAL SCHEDULES
CONTRACT NO. C02105
DRAWING NO. M–601
SHEET 8 OF 16
FILE NO. 2018–049

LAGUNA TREATMENT PLANT CHILLERS AND CLIMATE CONTROL UPGRADE AT ADMINISTRATION AND ANNEX BUILDING

ABBREVIATIONS

(D)	DEMOLISH
(E)	EXISTING
(F)	FUTURE
(N)	NEW
A	AMPERES
AC	ALTERNATING CURRENT
AF	AMP FRAME
AFF	ABOVE FINISHED FLOOR
AFG	ABOVE FINISHED GRADE
AHU	AIR HANDLING UNIT
AIC	AMPS INTERRUPTING CAPACITY
ANN	ANNUNCIATOR
ATS	AUTOMATIC TRANSFER SWITCH
AWG	AMERICAN WIRE GAUGE
BAT	BATTERY
BFG	BELOW FINISH GRADE
CATV	CABLE TELEVISION
C	CONDUIT
CB	CIRCUIT BREAKER
CCTV	CLOSED CIRCUIT TELEVISION
CO	CONDUIT ONLY
CPT	CONTROL POWER TRANSFORMER
CT	CURRENT TRANSFORMER
CU	COPPER
DC	DIRECT CURRENT
EF	EXHAUST FAN
EGU	ENGINE GENERATOR UNIT
EM	EMERGENCY
EMT	ELECTRICAL METALLIC TUBING
ENT	ELECTRICAL NON-METALLIC TUBING
EP	EXPLOSION PROOF
FA	FIRE ALARM
FACP	FIRE ALARM CONTROL PANEL
FC	FOOT CANDLE
FU	FUSE
GND	GROUND
GFCI	GROUND FAULT CIRCUIT INTERRUPTER
GFI	GROUND FAULT INTERRUPTER
GFR	GROUND FAULT RELAY
HID	HIGH INTENSITY DISCHARGE
HOA	"HAND-OFF-AUTO" SWITCH
HP	HORSEPOWER
HPS	HIGH PRESSURE SODIUM
HVAC	HEATING, VENTILATION & AIR-CONDITIONING
IG	ISOLATED GROUND
JB	JUNCTION BOX
KAIC	KILO-AMPS INTERRUPTING CAPACITY
KV	KILOVOLT
KVA	KILOVOLT-AMP
KW	KILOWATT
KWH	KILOWATT-HOUR
LPS	LOW PRESSURE SODIUM
LV	LOW VOLTAGE
MCB	MAIN CIRCUIT BREAKER
MCC	MOTOR CONTROL CENTER
MCP	MOTOR CIRCUIT PROTECTOR
MFR	MANUFACTURER
MH	METAL HALIDE
MLO	MAIN LUGS ONLY
MV	MEDIUM VOLTAGE
NIC	NOT IN CONTRACT
NL	NIGHT LIGHT
NTS	NOT TO SCALE
OC	ON CENTER
PA	PUBLIC ADDRESS
PT	POTENTIAL TRANSFORMER
PVC	POLYVINYL CHLORIDE
PB	PULL BOX, ELECTRICAL
RECPT	RECEPTACLE, OUTLET
RGS	RIGID GALVANIZED STEEL (CONDUIT)
RVSS	REDUCED VOLTAGE SOFT START
RTU	REMOTE TERMINAL UNIT
TV	TELEVISION MONITOR (SET)
TVSS	TRANS. VOLT. SURGE SUPPRESSOR
UF	UNDER FLOOR
UG	UNDERGROUND
UON	UNLESS OTHERWISE NOTED
UPS	UNINTERRUPTIBLE POWER SUPPLY
V	VOLT
VA	VOLT-AMP
VFD	VARIABLE FREQUENCY DRIVE
WP	WEATHERPROOF
WPI	WEATHERPROOF IN USE
XFMR	TRANSFORMER

ELECTRICAL SYMBOLS LEGEND

DIAGRAM

- ALARM, INDICATING LIGHT, SIGNAL LIGHT OR STROBE
- AT / AF — CIRCUIT BREAKER - SIZE AND TYPE AS INDICATED
- XXX/X NEMA XX — CIRCUIT BREAKER IN NEMA ENCLOSURE SIZE AND TYPE AS INDICATED
- OL — THERMAL OVERLOAD RELAY
- XXX/X, SIZE, OL — COMBINATION MOTOR CONTROLLER, STARTER, CIRCUIT BREAKER TYPE
- SHUNT TRIP
- DRAW-OUT TYPE CONNECTION
- DISCONNECT SWITCH WITH FUSE
- FUSE - SIZE AS INDICATED
- INTERLOCK, ELECTRICAL
- M — METER, ELECTRICAL
- M — MOTOR - SIZE AS INDICATED
- TRANSFER SWITCH, ATS: AUTOMATIC, MTS: MANUAL
- G — GENERATOR UNIT - RATED AS INDICATED
- TRANSFORMER, PAD MOUNT
- TRANSFORMER, DRY TYPE
- POTENTIAL TRANSFORMER WITH FUSE
- CURRENT TRANSFORMER
- SURGE ARRESTOR - LIGHTING
- GROUNDING ELECTRODE OR CONNECTION

POWER

- +48" — DUPLEX RECEPTACLE, 20A 125V 2P 3W, GROUNDING TYPE, MOUNTING HEIGHT: +18" AFF UON
  - DENOTES HEIGHT IN INCHES AFF (INTERIOR) AFG (EXTERIOR)
- $ — DUPLEX RECEPTACLE - SPLIT WIRED, SWITCHED
- DUPLEX RECEPTACLE - EMERGENCY POWER
- C — DUPLEX RECEPTACLE - CEILING MOUNTED
- FLOOR RECEPTACLE, 20A 125V 2P 3W, GROUNDING TYPE, FLUSH TYPE UON
- DOUBLE DUPLEX RECEPTACLE, 20A 125V 2P 3W, GROUNDING TYPE, MOUNTING HEIGHT: +18" AFF UON
- SINGLE RECEPTACLE, 20A 125V 2P 3W, GROUNDING TYPE, MOUNTING HEIGHT: +18" AFF UON
- OR — SPECIAL PURPOSE RECEPTACLE AS DESIGNATED SEE 'SPECIAL SYMBOLS' ON EACH SHEET
- DUAL SERVICE RECESSED FLOOR BOX WITH DUPLEX AND DATA RECEPTACLES
- J OR J — JUNCTION BOX, CODE SIZED UON
- FLOOR JUNCTION BOX
- DISCONNECT SWITCH - FUSED WHERE APPLICABLE
- MOTOR STARTER, COMBINATION WITH DISCONNECT SWITCH
- MOTOR STARTER OR CONTROLLER
- M — MOTOR CONNECTION
- CEILING EXHAUST FAN
- WH OR WH — WATER HEATER
- P — POWER POLE: P=POWER, T=TELEPHONE, D=DATA, C=COMBINATION
- TEST PORT
- OR — GROUND ROD
- GUY WIRE AND ANCHOR
- T — THERMOSTAT (SEE MECHANICAL DRAWINGS) COORDINATE MOUNTING HEIGHT
- BT — BYPASS TIMER OR TIME SWITCH
- PUSHBUTTON
- LC — LIGHTING CONTACTOR

ANNOTATION

- 1 — KEYNOTE
- 10 — RACEWAY, FEEDER OR CIRCUIT DESIGNATION (SEE SCHEDULE)
- A / 180 — LIGHTING FIXTURE TYPE DESIGNATION (SEE SCHEDULE)
  - DENOTES TYPE
  - DENOTES WATTS
- 1 / E-501 — DETAIL INDICATOR
  - DETAIL NUMBER
  - SHEET NUMBER ON WHICH DETAIL APPEARS
- A / E-301 — SECTION INDICATOR
  - SECTION LETTER
  - SHEET NUMBER ON WHICH SECTION APPEARS

EQUIPMENT

- MAIN SWITCHBOARD
- DISTRIBUTION PANEL BOARD
- COMBINATION METER/MAIN SERVICE PANEL
- OR — BRANCH CIRCUIT PANEL BOARD, SURFACE OR FLUSH MOUNTED
- OR — LIGHTING CONTROL PANEL
- OR — SIGNAL TERMINAL CABINET OR CONTROL PANEL SURFACE OR FLUSH MOUNTED
- SIGNAL TERMINAL BACKBOARD
- N30 — CONCRETE UNDERGROUND HAND HOLE (NUMBER DENOTES CHRISTY SIZE)
- T OR — TRANSFORMER

CONDUIT

- CONDUIT INSTALLED ABOVE GRADE
- CONDUIT INSTALLED UNDERGROUND OR UNDER SLAB
- CONDUIT STUB-OUT WITH CAP
- FLEXIBLE CONDUIT WHIP TO LIGHT FIXTURE OR EQUIPMENT
- L1-4 — INDICATES CIRCUIT BREAKER I.D.; INDICATES BRANCH PANEL
- CONDUIT HOME RUN TO DESIGNATED PANEL, TERMINAL, OR CONTROL CABINET EXAMPLES:
  - L1-6,8 — COMMA INDICATES MULTIPLE SINGLE POLE CIRCUITS
  - L1-10/12 — SLASH INDICATES MULTI-POLE CIRCUIT

NOTE FOR CONDUIT: THE TIC MARKS INDICATE THE QUANTITY OF #12 AWG WIRES OR, IF INDICATED, THE QUANTITY OF OTHER SIZE WIRE OR CABLES.

SEE THE SINGLE LINE DIAGRAM FOR FEEDER SIZES.
EXAMPLES:
- = (3) #12
- #10 = (2) #10
- F1 = (1) TYPE F1 CABLE. SEE CABLE SCHEDULE.

OBJECT LINES

- NEW OBJECTS (HEAVY CONTINUOUS LINES, UNDERGROUND CONDUIT HEAVY DASHED LINES)
- EXISTING OBJECTS TO REMAIN. MAY INCLUDE NEW CIRCUITING ETC. (FINE CONTINUOUS LINES, UNDERGROUND CONDUIT FINE DASHED LINES)
- EXISTING OBJECTS TO BE DEMOLISHED (EXTRA FINE DASHED LINES, SCREENED)

GENERAL ELECTRICAL NOTES

1. ALL WORK SHALL CONFORM TO AND BE PERFORMED IN ACCORDANCE WITH CODES, STANDARDS, AND ORDINANCES AS SET FORTH BY THE AUTHORITIES HAVING JURISDICTION AND THEIR LATEST ADOPTED EDITIONS OF THE FOLLOWING PUBLICATIONS:
   - (A) CALIFORNIA CODE OF REGULATIONS TITLE 24; INCLUDES; 2016 CALIFORNIA ELECTRICAL CODE, CALIFORNIA FIRE CODE, CALIFORNIA BUILDING CODE, ETC.
   - (B) NATIONAL FIRE PROTECTION ASSOCIATION (NFPA)
   - (C) AMERICANS WITH DISABILITIES ACT (ADA)
2. THE CONTRACTOR IS RESPONSIBLE TO MAINTAIN ALL EQUIPMENT IN A SAFE AND FUNCTIONAL CONDITION. KEEP DEAD FRONT EQUIPMENT IN PLACE WHILE EQUIPMENT IS ENERGIZED. CONDUCT ALL CONSTRUCTION OPERATIONS IN A SAFE MANNER FOR EMPLOYEES AS WELL AS OTHER WORK PERSONS OR ANYONE VISITING THE JOB SITE. PROVIDE BARRIERS, FLAGS, TAPE, ETC. AS REQUIRED TO MAINTAIN SAFETY.
3. BEFORE CONSTRUCTION, VISIT SITE TO VERIFY EXISTING CONDITIONS AND MAKE ALLOWANCE FOR VARIATIONS FROM THAT SHOWN.
4. DEMOLITION WORK SHOWN WAS PREPARED FOR THE CONVENIENCE OF THE CONTRACTOR. THE ENGINEER DOES NOT REPRESENT THAT ALL ITEMS WHICH MAY REQUIRE DEMOLITION HAVE BEEN SHOWN. IT SHALL BE THE RESPONSIBILITY OF THE CONTRACTOR TO CAREFULLY EXAMINE THE SITE AND THE CONTRACT DOCUMENTS AND TO PERFORM ALL DEMOLITION AND RECONSTRUCTION WHICH MAY BE REQUIRED FOR THE PROPER EXECUTION AND COMPLETION OF THE WORK.
5. INTERCEPT, EXTEND, REROUTE, REPULL CONDUCTORS AND OTHERWISE MODIFY EXISTING CONDUCTORS OF ALL SYSTEMS AS REQUIRED TO MAINTAIN AND/OR ESTABLISH PROPER FUNCTION AND SATISFY DESIGN INTENT. REMOVE ALL ABANDONED CONDUCTORS AND CONDUIT.
6. PRIOR TO COMMENCING WORK, COORDINATE WITH OWNER'S REPRESENTATIVE. WHERE DISCONNECTING, MODIFYING OR WORKING ON EXISTING EQUIPMENT OR SYSTEMS, PROVIDE A WRITTEN METHOD OF PROCEDURE OUTLINING DATES, TIMES, DURATION AND DESCRIPTION OF PROPOSED WORK PRIOR TO COMMENCING WORK FOR APPROVAL.
7. PRIOR TO COMMENCING WORK, COORDINATE WITH OTHER TRADES TO PREVENT CONFLICTS.
8. ALL EQUIPMENT SHALL BE LISTED AND LABELED PER RECOGNIZED ELECTRICAL TESTING LABORATORY AND INSTALLED PER THE LISTING REQUIREMENTS AND THE MANUFACTURERS INSTRUCTIONS.
9. ALL EQUIPMENT SHALL BE GROUNDED PER THE REQUIREMENTS OF CEC ARTICLES 250. EQUIPMENT GROUNDING CONDUCTORS SHALL BE INSTALLED IN ALL POWER SYSTEM RACEWAYS.
10. PULLROPES: ANY RACEWAY WITHOUT CABLE OR WIRE SHALL BE INSTALLED WITH MINIMUM 200 POUND TEST PULL LINE.

REGISTERED PROFESSIONAL ENGINEER — No. E15580 — Exp. 12/31/19 — ELECTRICAL — STATE OF CALIFORNIA — 7/8/19

GHD Inc.
2235 Mercury Way, Suite 150
Santa Rosa, California 95407 USA
T 707 523 1010 F 1 707 527 8679
W www.ghd.com

No.	Date	Revision	By
1	06/26	CONSTRUCTION DOCUMENTS	TW

DATE: APRIL 12, 2019 | SCALE: NONE
CHK BY: RPG | DWN BY: JJVL
APPROVED: Deputy Director – Engineering
By Lori Urbanek Date 6/28/19

CONSTRUCTION DOCUMENTS
City of Santa Rosa
CHILLERS AND CLIMATE CONTROL UPGRADE AT ADMINISTRATION AND ANNEX BUILDING
ELECTRICAL LEGEND, ABBREVIATIONS & NOTES

CONTRACT NO. C02105
DRAWING NO. E-001
SHEET 9 OF 16
FILE NO. 2018-049

LAGUNA TREATMENT PLANT CHILLERS AND CLIMATE CONTROL UPGRADE AT ADMINISTRATION AND ANNEX BUILDING

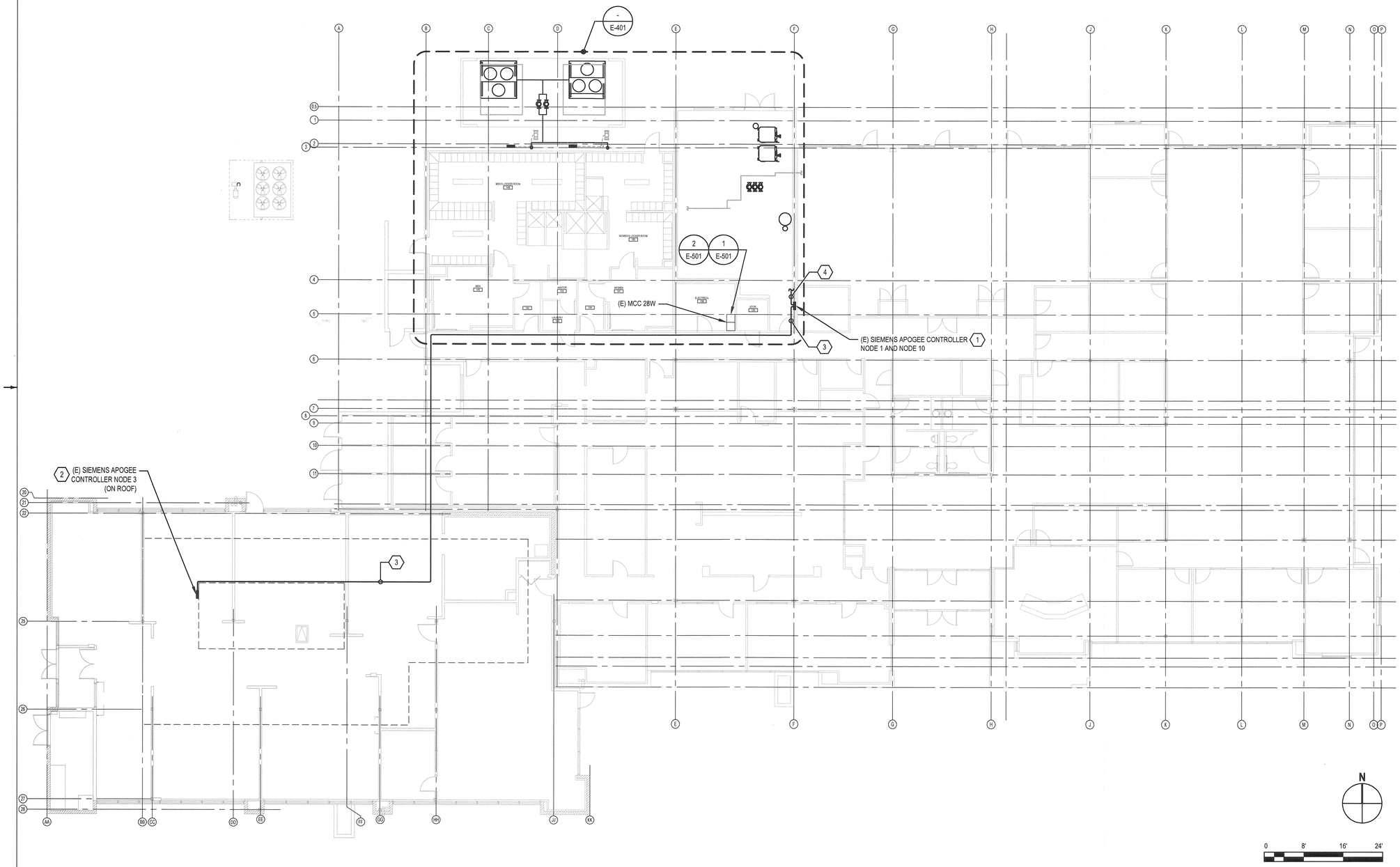

SHEET GENERAL NOTES

1. REMOVE EXISTING SIEMENS APOGEE CONTROLLERS AND REPLACE WITH SIEMENS S7-1500 PLC, COMPLETE WITH DC POWER SUPPLY, UNINTERRUPTIBLE POWER SUPPLY (UPS), NETWORK INTERFACES, INPUT/OUTPUT MODULES, AND OVERALL ENCLOSURE.
2. RECONNECT ALL EXISTING AND NEW FIELD DEVICES TO NEW SIEMENS PLC NODES. SEE SPECIFICATION SECTION 205 FOR FIELD CONNECTIONS TO EACH CONTROLLER'S I/O MODULES.
3. REMOVE EXISTING BACNET CABLING BETWEEN APOGEE CONTROLLER NODES AND REPLACE WITH PROFINET CABLING BETWEEN THE SIEMENS PLC NODES. SEE CONTROL SYSTEM BLOCK DIAGRAM ON E-603 FOR CONTROL SYSTEM NETWORK TOPOLOGY.

SHEET KEYNOTES

1. REMOVE (E) SIEMENS APOGEE CONTROLLER NODE 1 (IN MECHANICAL ROOM) AND REPLACE WITH A SIEMENS S7-1500 PLC.
2. REMOVE (E) SIEMENS APOGEE CONTROLLER NODE 3 (ON ROOF) AND REPLACE WITH A SIEMENS S7-1500 PLC, CONNECTED AS REMOTE I/O TO NODE 1.
3. REMOVE (E) BACNET CABLE FROM CONDUIT BETWEEN NODES 1 AND 3. PROVIDE PROFINET CABLE (BELDEN XXX, OR EQUAL) BETWEEN NODES IN (E) CONDUIT.
4. REMOVE (E) BACNET CABLE FROM CONDUIT BETWEEN NODES 2 AND 3. PROVIDE PROFINET CABLE (BELDEN XXX, OR EQUAL) BETWEEN NODES IN (E) CONDUIT.

REGISTERED PROFESSIONAL ENGINEER
No. E15580
Exp. 12/31/19
ELECTRICAL
STATE OF CALIFORNIA
6/28/19

GHD Inc.
2235 Mercury Way, Suite 150
Santa Rosa, California 95407 USA
T 1 707 523 1010 F 1 707 527 8679
W www.ghd.com

No.	Date	Revision	By
–	06/26	CONSTRUCTION DOCUMENTS	TW

SCALE: 3/32" = 1'-0" | DATE: APRIL 12, 2019
DWN BY: JJVL | CHK BY: RPG
APPROVED: *Deputy Director – Engineering*
By Lori Urbanek Date 6/28/19

CONSTRUCTION DOCUMENTS

City of Santa Rosa

CHILLERS AND CLIMATE CONTROL UPGRADE AT ADMINISTRATION AND ANNEX BUILDING

ELECTRICAL FLOOR PLAN - ADMIN BLDG

LAGUNA TREATMENT PLANT CHILLERS AND CLIMATE CONTROL UPGRADE AT ADMINISTRATION AND ANNEX BUILDING

CONTRACT NO. C02105

DRAWING NO. E–101

SHEET 10 OF 16

FILE NO. 2018–049

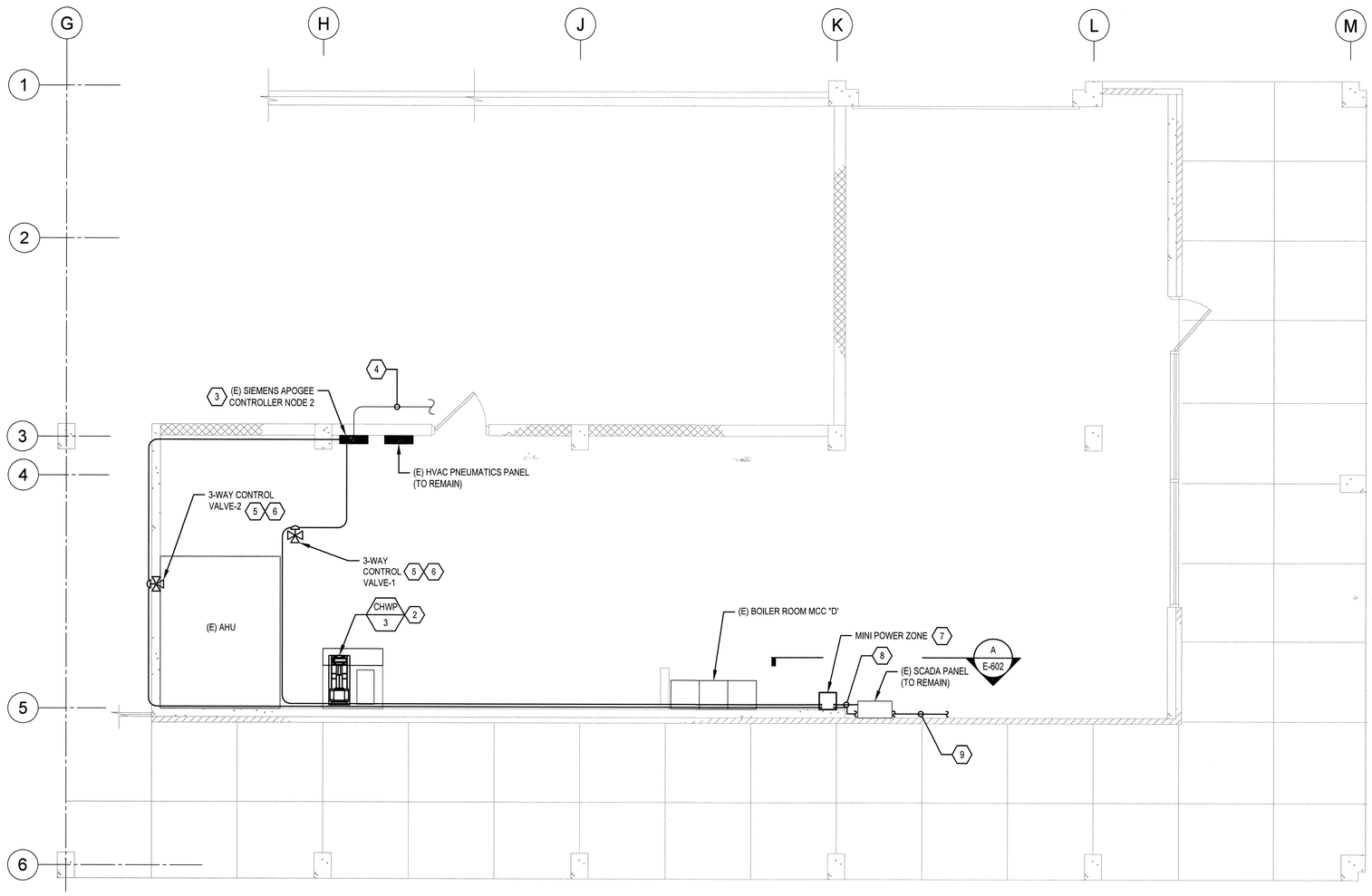

SHEET GENERAL NOTES

1. DISCONNECT (E) CHILLER AT (E) DISCONNECT SWITCH. CONNECT NEW CHILLER TO (E) CIRCUIT.
2. DISCONNECT (E) CHILLED WATER PUMP AT (E) DISCONNECT SWITCH. CONNECT NEW CHILLED WATER PUMP TO (E) CIRCUIT.
3. REMOVE EXISTING SIEMENS APOGEE CONTROLLERS AND REPLACE WITH SIEMENS S7-1500 PLC, COMPLETE WITH DC POWER SUPPLY, UNINTERRUPTIBLE POWER SUPPLY (UPS), NETWORK INTERFACES, INPUT/OUTPUT MODULES, AND OVERALL ENCLOSURE.
4. RECONNECT ALL EXISTING AND NEW FIELD DEVICES TO NEW SIEMENS PLC NODES. SEE SPECIFICATION SECTION 205 FOR FIELD CONNECTIONS TO EACH CONTROLLER'S I/O MODULES.
5. REMOVE EXISTING BACNET CABLING BETWEEN APOGEE CONTROLLER NODES AND REPLACE WITH PROFINET CABLING BETWEEN THE SIEMENS PLC NODES. SEE CONTROL SYSTEM BLOCK DIAGRAM ON E-603 FOR CONTROL SYSTEM NETWORK TOPOLOGY.

SHEET KEYNOTES

1. MAKE FINAL CONNECTION WITH (3) #6 AWG, (1) #10 GND IN 1" LIQUID-TIGHT FLEXIBLE METAL CONDUIT.
2. DISCONNECT POWER FROM (E) PUMP, MOTOR, RECONNECT TO (N) PUMP MOTOR.
3. REMOVE (E) SIEMENS APOGEE CONTROLLER NODE 2 (MECHANICAL ROOM) AND REPLACE WITH A SIEMENS S7-1500 PLC, CONNECTED AS REMOTE I/O TO NODE 1.
4. REMOVE (E) BACNET CABLE FROM CONDUIT BETWEEN NODES 1 AND 3. PROVIDE PROFINET CABLE (BELDEN XXX, OR EQUAL) BETWEEN NODES IN (E) CONDUIT.
5. CONNECT (N) POWER CONDUIT AND WIRING BETWEEN (N) MINI POWER ZONE AND (N) CONTROL VALVE.
6. CONNECT (N) CONTROL CONDUIT AND WIRING BETWEEN (N) CONTROL VALVE AND (E) SIEMENS APOGEE CONTROLLER NODE 2.
7. PROVIDE (N) MINI POWER ZONE AND RECONNECT (E) POWER WIRING.
8. CONNECT (N) POWER CONDUIT AND WIRING BETWEEN (N) MINI POWER ZONE AND (E) SCADA PANEL.
9. CONNECT (N) POWER CONDUIT AND WIRING BETWEEN (N) MINI POWER ZONE AND (E) ICE MAKER.
10. CONNECT (N) POWER CONDUIT AND WIRING BETWEEN (N) MINI POWER ZONE AND (E) CLUSTER TRUCK.

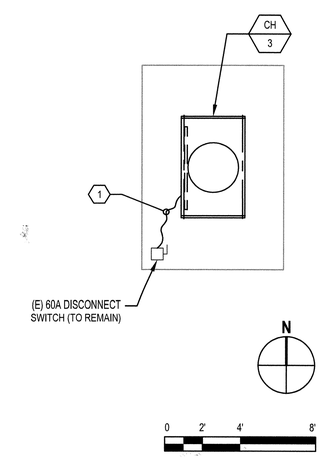

REGISTERED PROFESSIONAL ENGINEER
No. E15580
Exp. 12/31/19
ELECTRICAL
STATE OF CALIFORNIA
4/8/19

GHD Inc.
2235 Mercury Way, Suite 150
Santa Rosa, California 95407 USA
T 707 523 1010 F 1 707 527 8679
W www.ghd.com

No.	Date	Revision	By
1	06/26	CONSTRUCTION DOCUMENTS	TW

SCALE: 1/4" = 1'-0"
DATE: APRIL 12, 2019
DWN BY: JJVL
CHK BY: RPG
APPROVED: Deputy Director – Engineering
By Lori Urbanek Date 4/29/19

CONSTRUCTION DOCUMENTS
City of Santa Rosa

CHILLERS AND CLIMATE CONTROL UPGRADE AT ADMINISTRATION AND ANNEX BUILDING

ELECTRICAL FLOOR PLAN - ANNEX BLDG

LAGUNA TREATMENT PLANT CHILLERS AND CLIMATE CONTROL UPGRADE AT ADMINISTRATION AND ANNEX BUILDING

CONTRACT NO. C02105
DRAWING NO. E-102
SHEET 11 OF 16
FILE NO. 2018-049

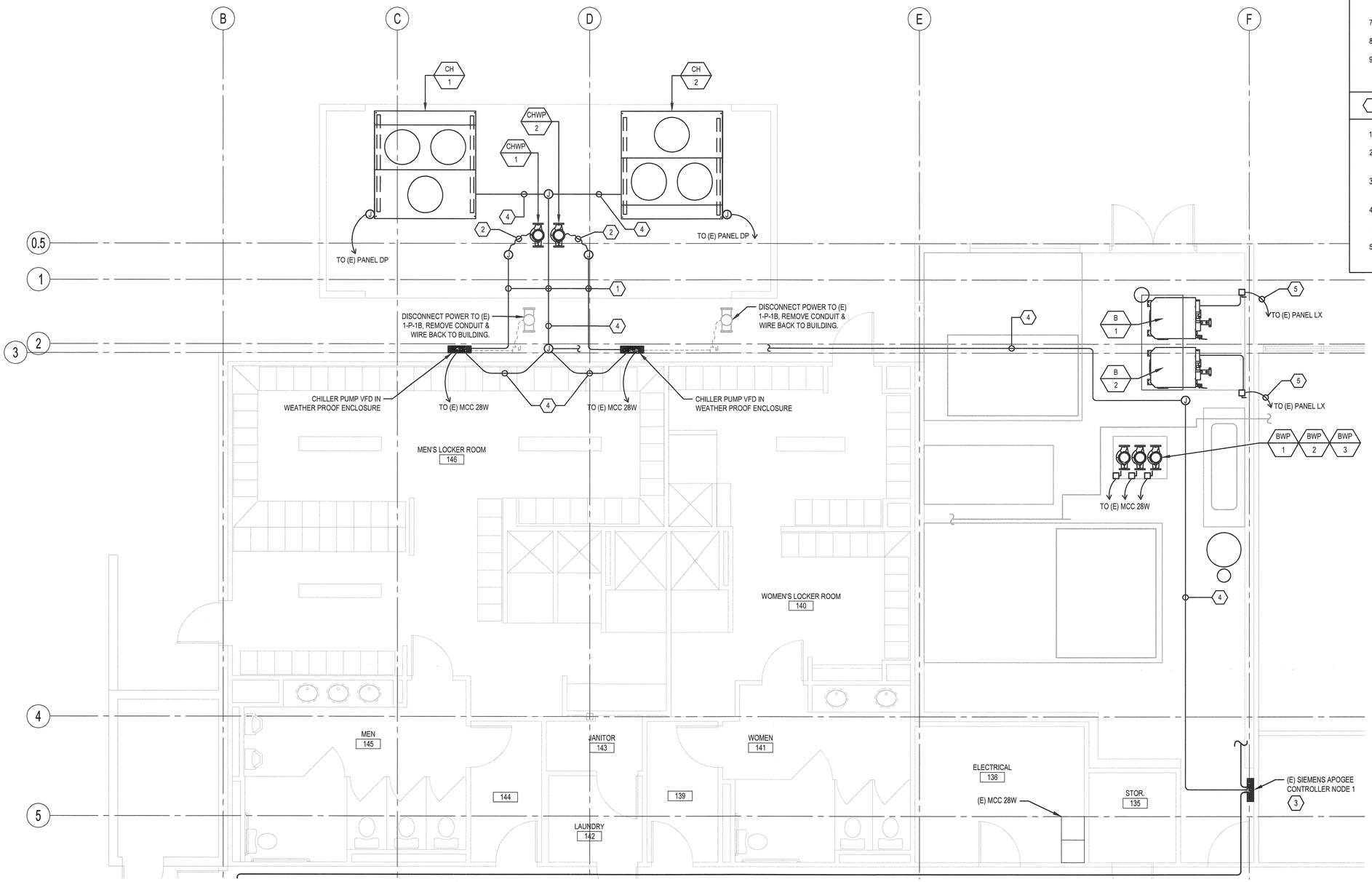

SHEET GENERAL NOTES

1. DISCONNECT (E) CHILLERS AT (E) DISCONNECT SWITCH. CONNECT NEW CHILLERS TO (E) CIRCUITS.
2. PROVIDE NEW CHILLER PUMP VFDS IN WEATHER PROOF ENCLOSURES, MOUNT TO EXTERIOR WALL ADJACENT TO PUMPS. CONNECT NEW PUMPS TO NEW VFDS.
3. PROVIDE DUAL FEEDER UNIT IN EXISTING MCC 28W SPACE TO FEED NEW VFDS.
4. DISCONNECT CHILLER PUMPS. REMOVE CONDUIT, WIRE, AND DISCONNECT SWITCHES.
5. DISCONNECT (E) HOT WATER PUMPS AT (E) DISCONNECT SWITCHES. EXTEND (E) CIRCUITS AND RECONNECT BWP-1 AND BWP-2.
6. CONNECT BWP-3 TO (E) STARTER IN MCC 28W. PROVIDE CONDUIT AND WIRE FROM FROM MCC TO NEW HOT WATER PUMP LOCATION.
7. SEE E-603 FOR CONTROLS BLOCK DIAGRAM.
8. SEE E-601 SINGLE LINE DIAGRAMS FOR CONDUIT AND WIRE REQUIREMENTS.
9. SEE SCHEDULES ON M-601 FOR MECHANICAL EQUIPMENT ELECTRICAL REQUIREMENTS.

SHEET KEYNOTES

1. ROUTE CONDUITS CLOSE TO PIPING TO MINIMIZE TRIPPING HAZARD.
2. MAKE FINAL CONNECTION TO MECHANICAL EQUIPMENT USING LIQUID-TIGHT FLEXIBLE METAL CONDUIT.
3. REMOVE (E) SIEMENS APOGEE CONTROLLER NODE 1 (IN MECHANICAL ROOM) AND REPLACE WITH A SIEMENS S7-1500 PLC.
4. PROVIDE BACNET NETWORK MS/TP CABLE, BELDEN 3106A OR EQUAL, IN 3/4" CONDUIT FROM NODE 1 BACNET GATEWAY TO CHILLERS AND CHILLER PUMP VFDS. SEE E-603 FOR CONTROLS BLOCK DIAGRAM.
5. PROVIDE (2) #12 AND (1) #12 GND IN 3/4" CONDUIT IF NOT OTHERWISE NOTED ON THE SINGLE-LINE DIAGRAM OR PLANS.

REGISTERED PROFESSIONAL ENGINEER
RICHARD P. GIOVANNI
No. E15580
Exp. 12/31/19
ELECTRICAL
STATE OF CALIFORNIA
6/28/19

GHD Inc.
2235 Mercury Way, Suite 150
Santa Rosa, California 95407 USA
T 707 523 1010 F 1 707 527 8679
W www.ghd.com

No.	Date	Revision	By
1	06/26	CONSTRUCTION DOCUMENTS	TW

SCALE: 1/4" = 1'-0" | DATE: APRIL 12, 2019
DWN BY: JJVL | CHK BY: RPG
APPROVED: Deputy Director – Engineering
By Lori Urbanek Date 6/28/19

CONSTRUCTION DOCUMENTS
City of Santa Rosa

CHILLERS AND CLIMATE CONTROL UPGRADE AT ADMINISTRATION AND ANNEX BUILDING

ELECTRICAL ENLARGED PLAN-ADMIN BLDG

CONTRACT NO. C02105
DRAWING NO. E-401
SHEET 12 OF 16
FILE NO. 2018-049

LAGUNA TREATMENT PLANT CHILLERS AND CLIMATE CONTROL UPGRADE AT ADMINISTRATION AND ANNEX BUILDING

SHEET GENERAL NOTES

1. SEE SINGLE LINE DIAGRAMS #2 AND #3 ON SHEET E-601.

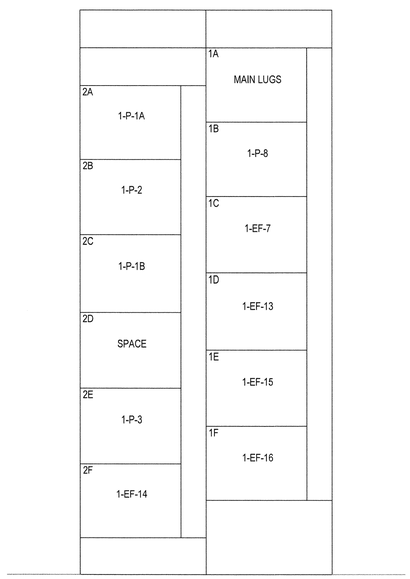

1 **MCC 28W ELEVATION - EXISTING**
SCALE: NONE

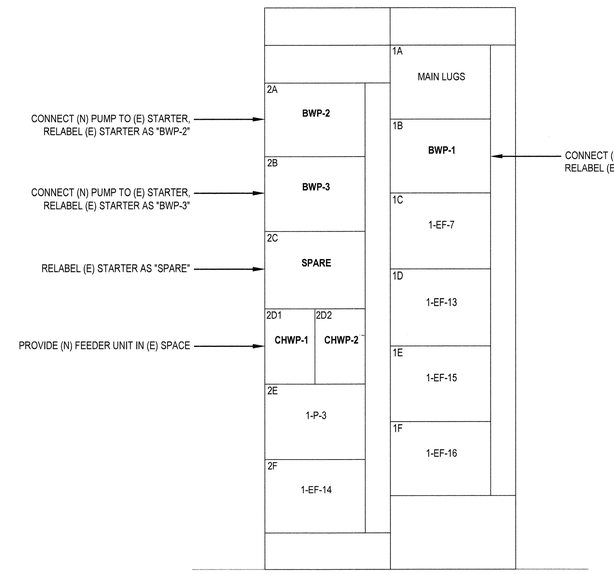

2 **MCC 28W ELEVATION - NEW WORK**
SCALE: NONE

REGISTERED PROFESSIONAL ENGINEER
No. E15580
Exp. 12/31/19
ELECTRICAL
STATE OF CALIFORNIA

GHD Inc.
2235 Mercury Way, Suite 150
Santa Rosa, California 95407 USA
T +1 707 523 1010 F +1 707 527 8679
W www.ghd.com

No.	Date	Revision	By
–	06/26	CONSTRUCTION DOCUMENTS	TW

DATE: APRIL 12, 2019
CHK BY: RPG
APPROVED: *Deputy Director – Engineering*
By Lori Urbanek Date 6/28/19

SCALE: NONE
DWN BY: JJVL

CONSTRUCTION DOCUMENTS
City of Santa Rosa

CHILLERS AND CLIMATE CONTROL UPGRADE AT ADMINISTRATION AND ANNEX BUILDING

ADMIN - MCC 28W ELEVATIONS

LAGUNA TREATMENT PLANT CHILLERS AND CLIMATE CONTROL UPGRADE AT ADMINISTRATION AND ANNEX BUILDING

CONTRACT NO. C02105
DRAWING NO. E–501
SHEET 13 OF 16
FILE NO. 2018–049

SHEET KEYNOTES

1. DISCONNECT (E) CHILLERS, RECONNECT TO (N) EQUIPMENT.
2. REMOVE 125A/3P BREAKERS, REPLACE W/ 150A/3P BREAKERS.
3. PROVIDE 200A FUSED DISCONNECTS, FUSES PER MANUFACTURER'S RECOMMENDATION.
4. (3) #2/0 AWG, (1) #6 GND IN 1 1/2" CONDUIT.
5. 30A NON-FUSED DISCONNECT.
6. (3) #12 AWG, (1) #12 GND IN 3/4" CONDUIT.

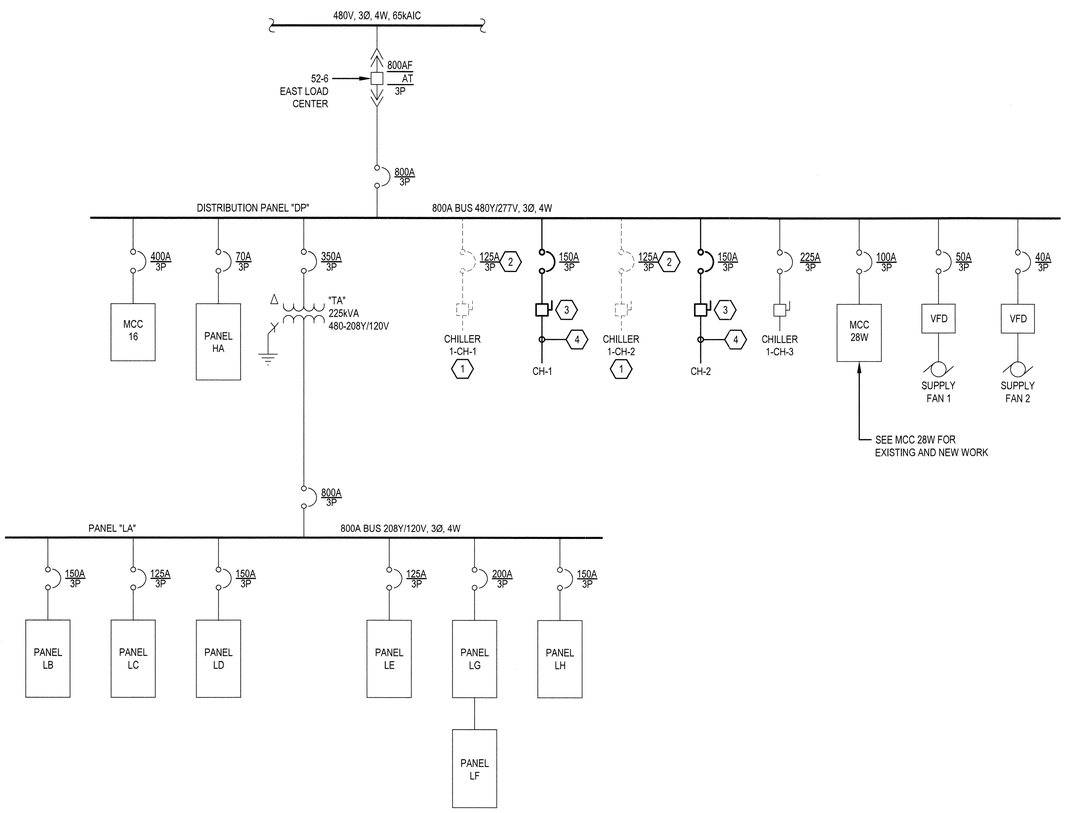

1 **SINGLE LINE DIAGRAM**
SCALE: NONE

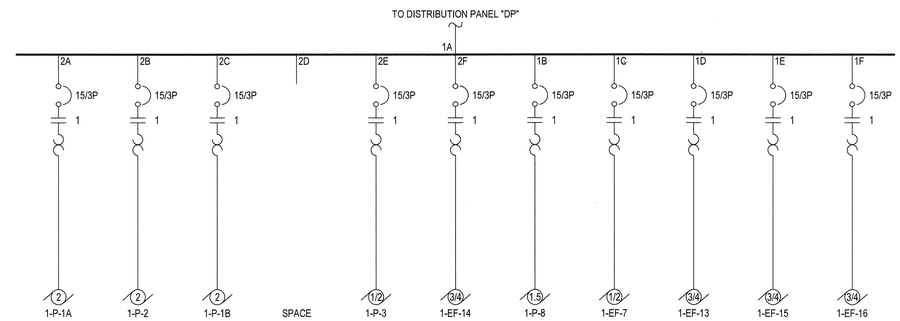

2 **MCC 28W - EXISTING**
SCALE: NONE

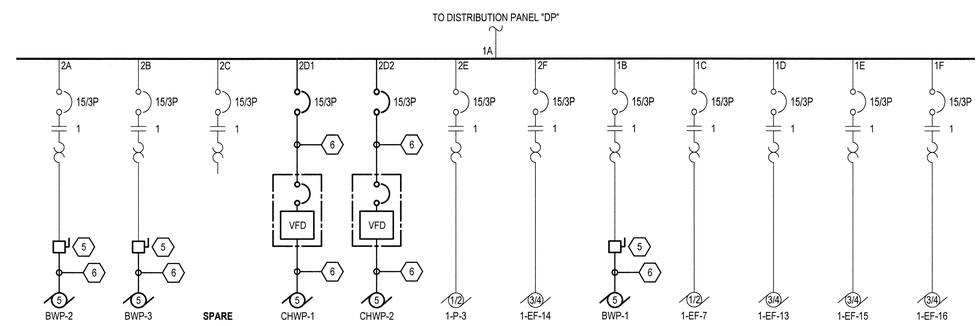

3 **MCC 28W - NEW WORK**
SCALE: NONE

REGISTERED PROFESSIONAL ENGINEER
No. E15580
Exp. 12/31/19
ELECTRICAL
STATE OF CALIFORNIA
6/28/19

GHD Inc.
2235 Mercury Way, Suite 150
Santa Rosa, California 95407 USA
T 1 707 523 1010 F 1 707 527 8679
W www.ghd.com

No.	Date	Revision	By
–	06/26	CONSTRUCTION DOCUMENTS	TW

DATE: APRIL 12, 2019
CHK BY: RPG
SCALE: NONE
DWN BY: JJVL
APPROVED: Deputy Director – Engineering
By Lori Urbanek Date 6/28/19

CONSTRUCTION DOCUMENTS
City of Santa Rosa

CHILLERS AND CLIMATE CONTROL UPGRADE AT ADMINISTRATION AND ANNEX BUILDING

SINGLE LINE DIAGRAMS - ADMIN BLDG

LAGUNA TREATMENT PLANT CHILLERS AND CLIMATE CONTROL UPGRADE AT ADMINISTRATION AND ANNEX BUILDING

CONTRACT NO. C02105
DRAWING NO. E–601
SHEET 14 OF 16
FILE NO. 2018–049

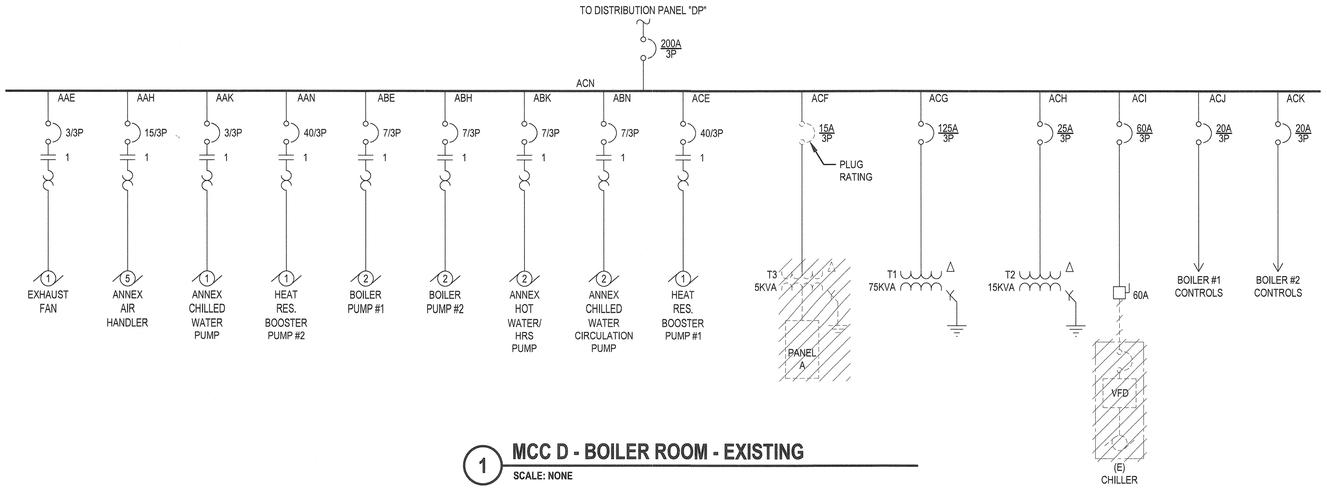

1 MCC D - BOILER ROOM - EXISTING

SCALE: NONE

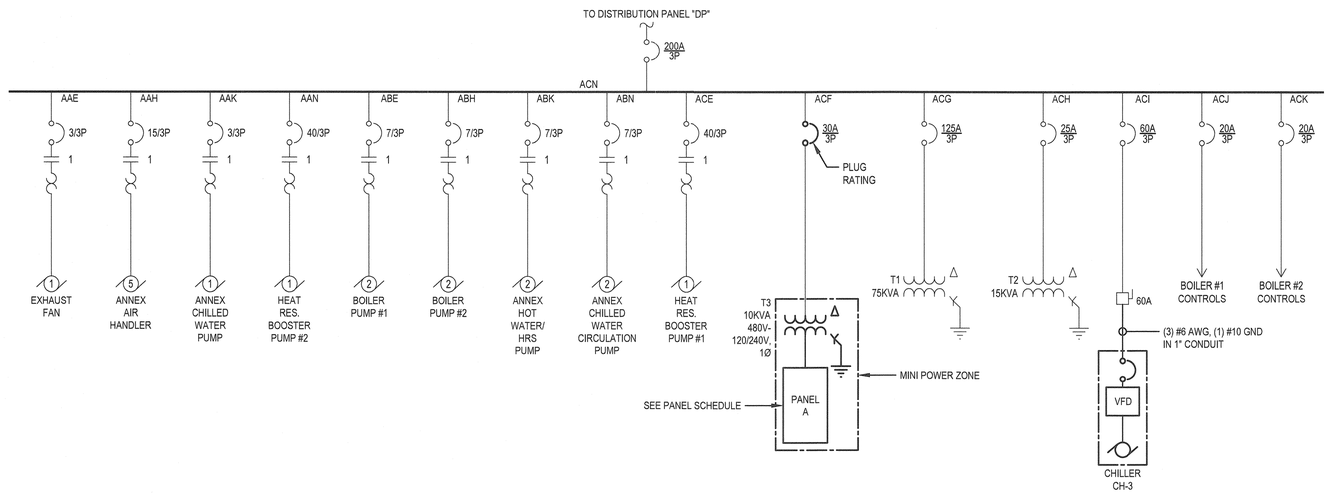

2 MCC D - BOILER ROOM - NEW WORK

SCALE: NONE

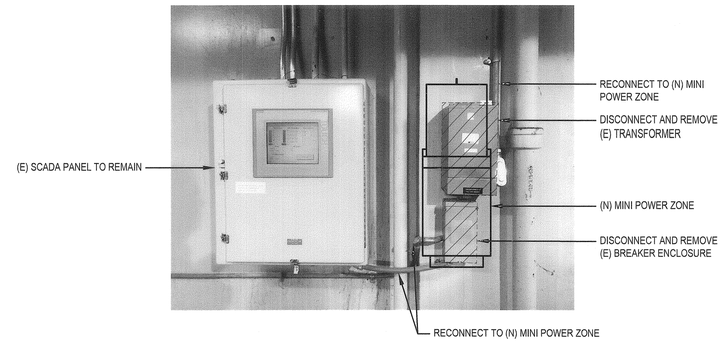

A EQUIPMENT ELEVATION

SCALE: NONE

PANEL SCHEDULE

PANEL NAME: A | VOLTAGE: 240/120 | NEMA RATING: | MOUNTING: | NOTES:
MAINS RATING: A MCB | PHASE: 1 | AIC RATING: | LOCATION:
BUS RATING: A | WIRE: 3 | DEMAND FACTOR: STD

CKT NO.	USE	DESCRIPTION	BKR SIZE	CKT KVA	CKT AMPS	WIRE SIZE	WIRE LENGTH (FT)	VOLTAGE DROP %	PHASE	VOLTAGE DROP %	WIRE LENGTH (FT)	WIRE SIZE	CKT AMPS	CKT KVA	BKR SIZE	DESCRIPTION	USE	CKT NO.
1	O	CLUSTER TRUCK	20/1	0.10	0.83				A				0.83	0.10	20/1	ICE MAKER	O	2
3	O	SCADA PANEL	20/1	0.20	1.67	12	3	0.01	B	0.011	45	12	0.08	0.01	20/1	CONTROL VALVE - 1	O	4
5		SPARE	20/1						A	0.012	50	12	0.08	0.01	20/1	CONTROL VALVE - 2	O	6
7		SPARE	20/1						B						20/1	SPARE		8
9		SPACE							A							SPACE		10

CONNECTED KVA		DEMAND KVA	DEMAND AMPS
PHASE A:	0.2	0.2	1.8
PHASE B:	0.2	0.2	1.8

STD DEMAND LOAD BASED ON 125% OF THE LARGEST MOTOR AND 100% OF THE REMAINING MOTORS, 125% OF CONTINUOUS LOADS, 100% OF NONCONTINUOUS LOADS, AND 50% OF RECEPTACLE LOADS BEYOND THE FIRST 10KVA

USE LEGEND		
ID	LOAD TYPE	ASSUMED PF
H	HVAC	0.85
L	LIGHTING	0.80
M	MOTOR	0.85
R	RECEPTACLE	0.80
P	PANEL	0.85
O	OTHER	0.85

VOLTAGE DROP CALCULATION

VOLTAGE DROP IS BASED ON THE IEEE RED BOOK AND 2011 NEC CHAPTER 9 TABLE 9 FORMULA:

VD = I * (R * PF + X * SIN(ACOS(PF)) * L

WITH AN ADDITIONAL MULTIPLIER OF 2 FOR SINGLE PHASE AND 1.732 FOR 3-PHASE LOADS

R AND X VALUES ARE TAKEN FROM 2011 NEC CHAPTER 9 TABLE 9. LENGTH IS IN 1000FT INCREMENTS

ASSUMPTIONS:

POWER FACTOR	VARIED BY LOAD TYE
CONDUIT TYPE	RGS
WIRE MATERIAL	CU

REGISTERED PROFESSIONAL ENGINEER
Richard T. Gray
No. E15580
Exp. 12/31/19
ELECTRICAL
STATE OF CALIFORNIA
6/5/19

GHD Inc.
2235 Mercury Way, Suite 150
Santa Rosa, California 95407 USA
T 1 707 523 1010 F 1 707 527 8679
W www.ghd.com

No.	Date	Revision	By
–	06/26	CONSTRUCTION DOCUMENTS	TW

SCALE: NONE | DATE: APRIL 12, 2019
DWN BY: JJVL | CHK BY: RPG
APPROVED: Deputy Director – Engineering
By Lori Urbanek Date 6/28/19

CONSTRUCTION DOCUMENTS
City of Santa Rosa

CHILLERS AND CLIMATE CONTROL UPGRADE AT ADMINISTRATION AND ANNEX BUILDING

SLD - ADMIN BOILER ROOM, ELEV. & SCHEDULE

CONTRACT NO. C02105
DRAWING NO. E–602
SHEET 15 OF 16
FILE NO. 2018–049

LAGUNA TREATMENT PLANT CHILLERS AND CLIMATE CONTROL UPGRADE AT ADMINISTRATION AND ANNEX BUILDING

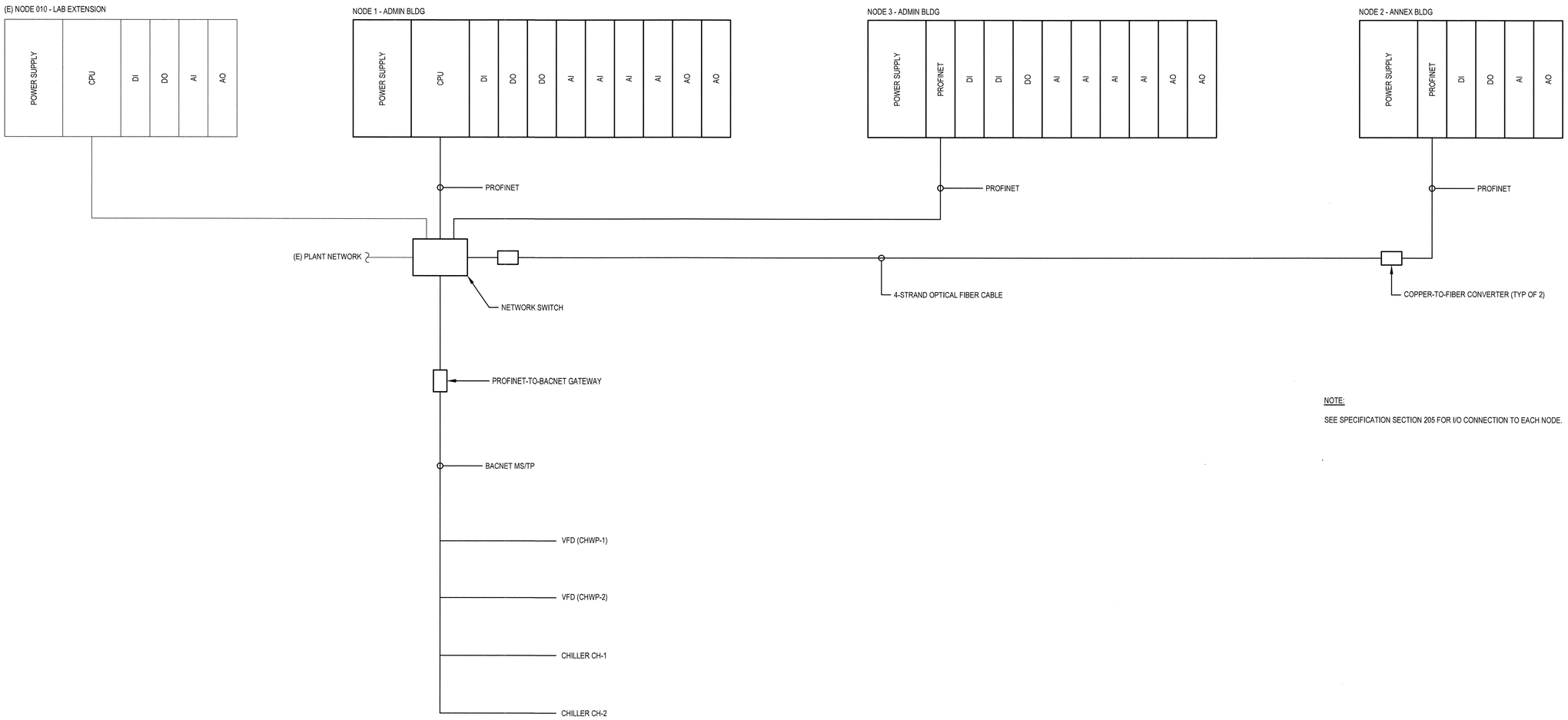

NOTE:

SEE SPECIFICATION SECTION 205 FOR I/O CONNECTION TO EACH NODE.

1 **CONTROLS BLOCK DIAGRAM**
SCALE: NONE

REGISTERED PROFESSIONAL ENGINEER
No. E15580
Exp. 12/31/19
ELECTRICAL
STATE OF CALIFORNIA
7/31/19

GHD Inc.
2235 Mercury Way, Suite 150
Santa Rosa, California 95407 USA
T T 707 523 1010 F T 707 527 8679
W www.ghd.com

No.	Date	Revision	By
–	06/26	CONSTRUCTION DOCUMENTS	TW

DATE: APRIL 12, 2019
SCALE: NONE
DWN BY: JJVL
CHK BY: RPG
APPROVED: *Deputy Director – Engineering*
By Lori Urbanek Date 6/28/19

CONSTRUCTION DOCUMENTS
City of Santa Rosa

CHILLERS AND CLIMATE CONTROL UPGRADE AT ADMINISTRATION AND ANNEX BUILDING

CONTROLS BLOCK DIAGRAM

CONTRACT NO. C02105
DRAWING NO. E–603
SHEET 16 OF 16
FILE NO. 2018–049

LAGUNA TREATMENT PLANT CHILLERS AND CLIMATE CONTROL UPGRADE AT ADMINISTRATION AND ANNEX BUILDING